Norbar Torque Tools

75 YEARS OF TORQUE INNOVATION

CATALOGUE 2018

LEGEND

TORQUE WRENCHES

Accuracy (%)	Ratchet	Digital Display
Single Scale	Torque Handle	IP Rated
Dual Scale	Fixed	Case Included
Multi Scale	Declaration of Conformance	Calibration Certificate
Adjustment Lock	Torque & Angle	

MANUAL TORQUE MULTIPLIERS

Accuracy (%)	Calibration Certificate	Anti Wind-up Ratchet
Adjustable Reaction	UKAS Certification	Case Included

POWERED TORQUE MULTIPLIERS

Accuracy (%)	2 Speed	Calibration Certificate
Dual Scale	Bi-Directional	IP Rated
Multi Scale	Adjustable Reaction	Air Consumption - litres/sec
Lifting Attachment	Torque & Angle	Case Included

TORQUE MEASUREMENT INSTRUMENTS

Accuracy (%)	Digital Display	Case Included
Multi Transducers	Calibration Certificate	Back-up Data
Multi Scale	UKAS Certification	

HYDRAULIC TOOL CALIBRATION FIXTURES

Accuracy (%)		

HARSH ENVIRONMENT INSTRUMENTS

Accuracy (%)	UKAS Certification	Case Included
Multi Transducers	IP Rated	
Multi Scale	Digital Display	

ULTRASONIC MEASUREMENT

Multi Scale	Back-up Data	Case Included
Digital Display	Calibration Certificate	

CALIBRATION BEAMS & WEIGHTS

UKAS Certification	Case Included	

CONTENTS

CONTENTS

About Norbar	2
Introduction to Torque	3
ISO 6789:2017	9
Torque Screwdrivers	11
TT Torque Wrenches	11
TTi Tethered Torque Wrenches	12
TTi Non-Magnetic Torque Wrenches	12
NorTorque® Torque Wrenches	13
Slimline™ Torque Wrenches	15
Professional Torque Wrenches Model 5	16
Professional Torque Wrenches	17
Professional 'P' Type Torque Wrenches	21
Professional Torque Wrenches Models 650 - 1500	23
Industrial Torque Wrenches	25
Electrode Torque Wrenches	28
ClickTronic® Torque Wrenches	29
NorTronic® Torque Wrenches	31
Insulated Torque Wrenches	32
Spanner End Fittings	33
HandTorque® Torque Multipliers	38
Powered Torque Tools	50
Lubro Control Units	74
Tool Controllers	75
Torque Measurement	76
Transducers	84
Loaders & Attachments	89
Test Fixtures	93
Hydraulic Tool Calibration Fixtures	95
Harsh Environment HE Range	98
Ultrasonic Measurement	104
Calibration Beams & Weights	106
Spares Kits	109
Service Replacement Policy	109
Calibration Services	113
Global Service	118
Terms & Conditions	119

bsi. ISO 9001 Quality Management Q06228 ISO 50001 Energy Management EnMS 621748

Printed in the UK

ABOUT NORBAR

GLOBAL SERVICE

We are the world's leading specialist in torque control and we are engaged solely in the design, development and production of torque tightening and measuring equipment.

Our customers include manufacturers and engineering services in such diverse sectors as aerospace, energy, oil and gas, mining and sub-sea.

There are sales and service branches in Australia, New Zealand, North America, Singapore, China and India. In addition, we have distributors of our torque control products in more than 60 countries around the world.

A FAMILY RUN BUSINESS

The Brodey family has been a part of Norbar since Bill Brodey and his partner Ernest Thornitt incorporated the company in 1943. We are now the third generation of the family to manage the business and are passionate about its every aspect. In 2018 we are proud to celebrate our 75th anniversary. From our humble beginnings in a small workshop in Banbury town centre, Norbar has grown into an international group of companies that leads the field of torque control. However, what has not changed in 75 years is that our product range is still substantially manufactured in Banbury with many suppliers in the surrounding area and we are still dedicated to being the best at what we do. As Bill Brodey's original slogan stated "made in Banbury in accordance with time-honoured tradition".

This year we are also excited to be extending our Professional Torque Wrench range with the additions of Model 15 and 25. These models are not just Professional wrenches with a lower calibrated range but an entirely new and miniaturised version of the larger models. Following the successful launch of the HT3-1000 compact torque multiplier in 2017, this model will be followed in 2018 by 2000 N·m and 3000 N·m versions bringing a complete revamp to the ever popular HT3 family (the older models remaining in production for an overlap period). Early in 2018 we will be launching the highly anticipated automated version of our Torque Wrench Calibrator, designed to facilitate the effortless calibration of torque wrenches to ISO 6789-2:2017.

We continue to invest in the very latest design, manufacturing and quality control technology to achieve the highest level of innovation and precision in the field of torque control and equipment.

The Norbar Directors from left to right: Philip Brodey (Sales & Marketing Director), Catherine Rohll (Commercial Director), Craig Brodey (Director), Neill Brodey (Managing Director)

INTRODUCTION TO TORQUE

What is Torque?

Torque is any force or system of forces that tends to cause rotation about an axis.

Measurement of Torque

Imagine someone tightening a bolt using a socket attached to a meter (m) long bar. If they apply 10 kg of force (kgf) perpendicular to the bar they will produce a torque of 10 kgf·m at the axis (the centre of the bolt).

However, under the S.I. system of measurement, force is expressed in Newtons (N) rather than kgf. The conversion between kgf and N is x 9.807 so the person is applying 98.07 N·m of torque.

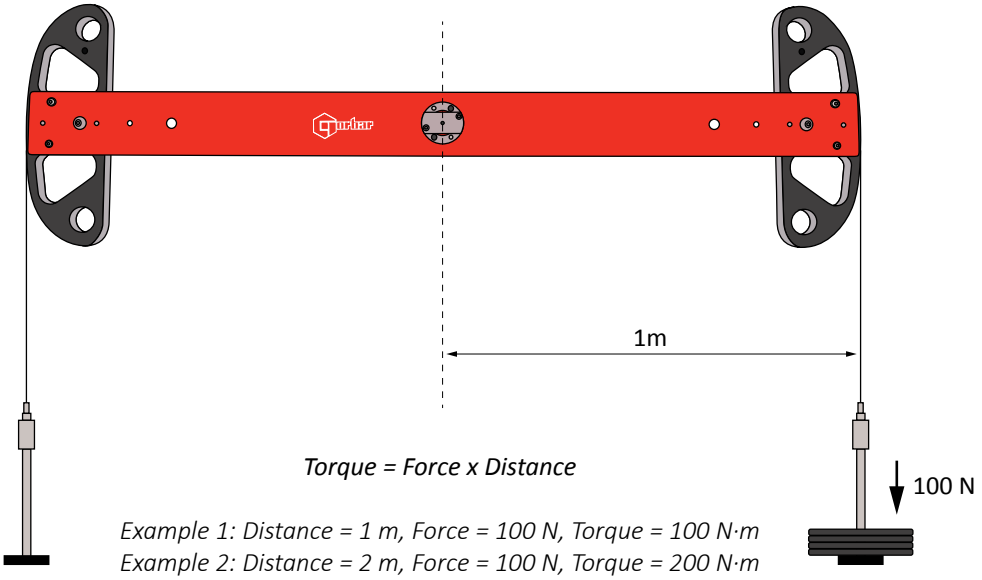

Torque = Force x Distance

Example 1: Distance = 1 m, Force = 100 N, Torque = 100 N·m
Example 2: Distance = 2 m, Force = 100 N, Torque = 200 N·m
Example 3: Distance = 1 ft, Force = 100 lbf, Force = 100 lbf·ft (or 100 ft·lb)

The Importance of Torque Control

Although many methods exist to join two or more parts together, the ease of assembly and disassembly provided by threaded fasteners make them the ideal choice for many applications.

The object of a threaded fastener is to clamp parts together with a tension greater than the external forces tending to separate them. The bolt then remains under constant stress and is immune from fatigue. However, if the initial tension is too low, varying loads act on the bolt and it will quickly fail. If the initial tension is too high, the tightening process may cause bolt failure. Reliability therefore depends upon correct initial tension. The most practical way of ensuring this is by specifying and controlling the tightening torque.

Bolt Tension

When an assembly is clamped by tightening a nut and bolt, the induced tension causes the bolt to stretch. An equal force acts to compress the parts which are thus clamped.

The proof load of a bolt, normally established by test, is the load which just starts to induce permanent set – also known as the yield point. Typically bolts are tightened to between 75% and 90% of yield.

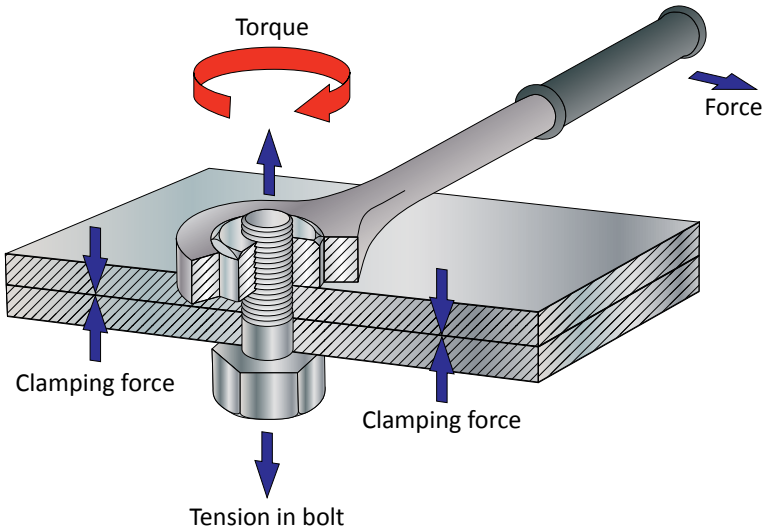

INTRODUCTION TO TORQUE

Friction in the Bolted Joint

When a threaded fastener is tightened, the induced tension results in friction under the head of the bolt and in the threads. It is generally accepted that as much as 50% of the applied torque is expended in overcoming friction between the bolt head and the abutting surface and another 30% to 40% is lost to friction in the threads. As little as 10% of the applied torque results in useful work to tension the bolt.

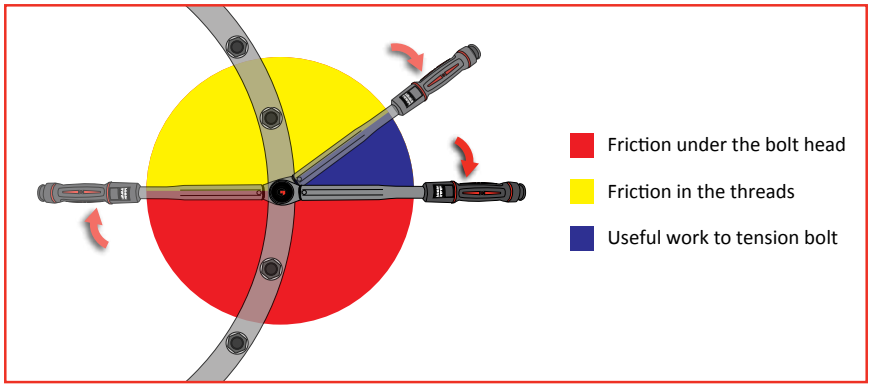

Given that up to 90% of the applied torque will be lost to friction, it follows that any changes in the coefficient of friction resulting from differences in surface finish, surface condition and lubrication can have a dramatic effect on the torque versus tension relationship. Some general points can be made:

- Most torque tightened joints do not use washers because their use can result in relative motion between the nut and washer or the washer and joint surface during tightening. This has the effect of changing the friction radius and hence affects the torque-tension relationship. Where a larger bearing face is required then flange nuts or bolts can be used. If washers are to be used, hard washers with a good fit to the shank of the bolt give lower and more consistent friction and are generally to be preferred.
- Degreasing fasteners of the film of oil usually present on them as supplied will decrease the tension for a given torque and may result in shear of the fastener before the desired tension is achieved.
- Super lubricants formulated from graphite, molybdenum disulphide and waxes result in minimal friction. Unless allowance is made in the specified tightening torque, the induced tension may be excessive causing the bolt to yield and fail. However, used in a controlled manner, these lubricants serve a useful purpose in reducing the torque to produce the desired tension meaning that a lower capacity tightening tool can be used.
- For reasons of appearance or corrosion resistance, fasteners may be plated. These treatments affect the coefficient of friction and therefore the torque versus tension relationship.
- Friction is often deliberately introduced into the fastener to reduce the possibility of loosening due to vibration. Devices such as lock-nuts must be taken into account when establishing the correct tightening torque.

As a rough guide, the calculated tightening torque should be multiplied by the factor from the table below according to surface treatment and lubrication.

		Surface Condition of Bolt			
		Untreated	Zinc	Cadmium	Phosphate
Surface Condition of Nut	Untreated	1.00	1.00	0.80	0.90
	Zinc	1.15	1.20	1.35	1.15
	Cadmium	0.85	0.90	1.20	1.00
	Phosphate and oil	0.70	0.65	0.70	0.75
	Zinc with wax	0.60	0.55	0.65	0.55

INTRODUCTION TO TORQUE

Tightening to Yield

Bolts tightened to yield provide consistently higher preloads from smaller diameter bolts. The reduced fastener stiffness reduces the fatigue loading to which the bolt is subjected under repeated external load reversals, e.g. cylinder heads and connecting rods.

In theory, a bolt tightened to its yield point will provide the strongest and most fatigue-resistant joint possible, within the physical limitations of the bolt material and manufacturing process.

The downside of this method is the cost of the sophisticated equipment necessary to determine when the bolt goes into yield.

Torque Tension Calculator

For further information and guidance on establishing the correct tightening torque for a fastener, see Norbar's web based calculator, www.norbar.com/Home/Torque-Tension-Calculator

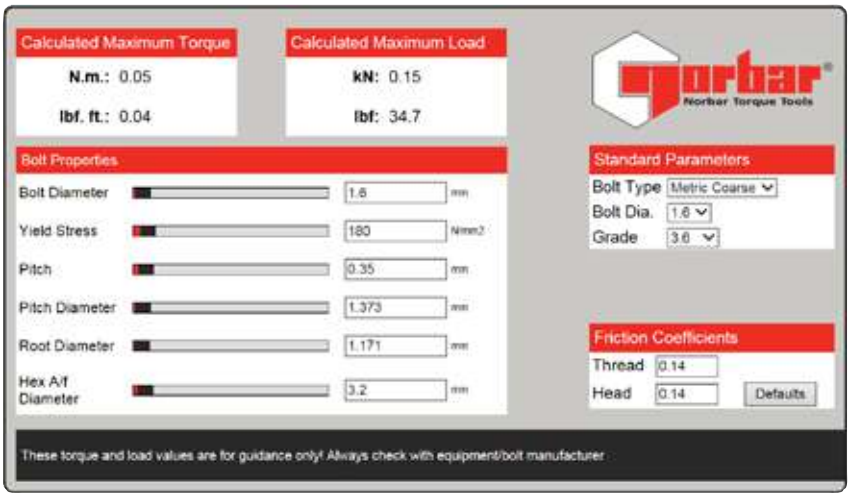

When Torque Doesn't Equal Tight

As we have established, it is the tension in a fastener rather than the torque that is the critical factor. Torque is an indirect means of establishing tension and in a correctly engineered joint and with a controlled tightening process, it is a satisfactory method under the majority of circumstances.

However, in joints that are highly critical due to safety or the cost and implications of machine down-time, a more direct means of establishing tension is needed. Various methods exist including several types of load indicating bolt or washer. However, one of the most versatile methods is to measure the extension of the bolt due to the tightening process using ultrasound and this is exactly what Norbar's USM-3 does. For full details of this instrument see page 105 and Norbar's web site: www.norbar.com.

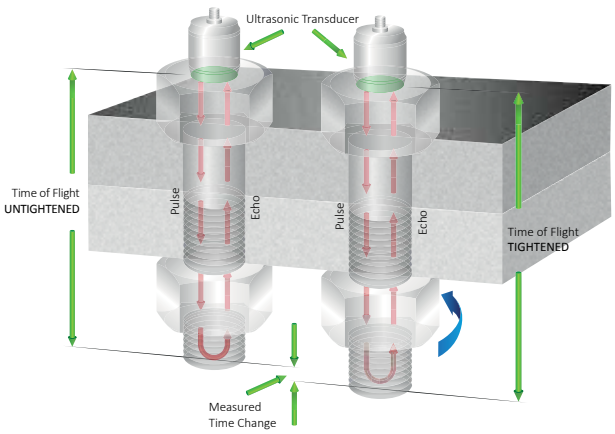

INTRODUCTION TO TORQUE

Recommended Maximum Torque Values

The information supplied here is intended to be an acceptable guide for normal conditions. For critical applications, further information and research will be necessary. The following basic assumptions have been made:

a. Bolts are new, standard finish, uncoated and not lubricated (other than the normal protective oil film)

b. The load will be 90% of the bolt yield strength

c. The coefficient of friction is 0.14

d. The final tightening sequence is achieved smoothly and slowly

If lubrication is to be applied to the nut/bolt, multiply the recommended torque by the appropriate factor shown in the table on page 4. Alternatively, use the Torque/Tension Calculator on the Norbar website (shown on page 5) which enables fastener and friction conditions to be modified with ease.

M	BOLT GRADE									mm
	3.6	4.6	5.6	5.8	6.8	8.8	9.8	10.9	12.9	
	Torque in N·m									
M 1.6	0.05	0.07	0.09	0.11	0.14	0.18	0.21	0.26	0.31	3.2
M 2	0.11	0.14	0.18	0.24	0.28	0.38	0.42	0.53	0.63	4
M 2.5	0.22	0.29	0.36	0.48	0.58	0.78	0.87	1.09	1.31	5
M 3	0.38	0.51	0.63	0.84	1.01	1.35	1.52	1.9	2.27	5.5
M 4	0.71	0.95	1.19	1.59	1.91	2.54	2.86	3.57	4.29	7
M 5	1.71	2.28	2.85	3.8	4.56	6.09	6.85	8.56	10.3	8
M 6	2.94	3.92	4.91	6.54	7.85	10.5	11.8	14.7	17.7	10
M 8	7.11	9.48	11.9	15.8	19	25.3	28.4	35.5	42.7	13
M 10	14.3	19.1	23.8	31.8	38.1	50.8	57.2	71.5	85.8	17
M 12	24.4	32.6	40.7	54.3	65.1	86.9	97.9	122	147	19
M 14	39	52	65	86.6	104	139	156	195	234	22
M 16	59.9	79.9	99.8	133	160	213	240	299	359	24
M 18	82.5	110	138	183	220	293	330	413	495	27
M 20	117	156	195	260	312	416	468	585	702	30
M 22	158	211	264	352	422	563	634	792	950	32
M 24	202	270	337	449	539	719	809	1011	1213	36
M 27	298	398	497	663	795	1060	1193	1491	1789	41
M 30	405	540	675	900	1080	1440	1620	2025	2430	46
M 33	550	734	917	1223	1467	1956	2201	2751	3301	50
M 36	708	944	1180	1573	1888	2517	2832	3540	4248	55
M 39	919	1226	1532	2043	2452	3269	3678	4597	5517	60
M 42	1139	1518	1898	2530	3036	4049	4555	5693	6832	65
M 45	1425	1900	2375	3167	3800	5067	5701	7126	8551	70
M 48	1716	2288	2860	3813	4576	6101	6864	8580	10296	75
M 52	2210	2947	3684	4912	5895	7859	8842	11052	13263	80
M 56	2737	3650	4562	6083	7300	9733	10950	13687	16425	85
M 60	3404	4538	5673	7564	9076	12102	13614	17018	20422	90
M 64	4100	5466	6833	9110	10932	14576	16398	20498	24597	95
M 68	4963	6617	8271	11029	13234	17646	19851	24814	29777	100

INTRODUCTION TO TORQUE

Torque Conversion Factors

Units to be converted	S.I. Units		Imperial Units			Metric Units	
	cN·m	N·m	ozf·in	lbf·in	lbf·ft	kgf·cm	kgf·m
1 cN·m =	1	0.01	1.416	0.088	0.007	0.102	0.001
1 N·m =	100	1	141.6	8.851	0.738	10.20	0.102
1 ozf·in =	0.706	0.007	1	0.0625	0.005	0.072	0.0007
1 lbf·in =	11.3	0.113	16	1	0.083	1.152	0.0115
1 lbf·ft =	135.6	1.356	192	12	1	13.83	0.138
1 kgf·cm =	9.807	0.098	13.89	0.868	0.072	1	0.01
1 kgf·m =	980.7	9.807	1389	86.8	7.233	100	1

FORCE
lbf x 4.45 = N
N x 0.225 = lbf

FLOW
l/s x 2.119 = cu·ft/min
cu·ft/min x 0·472 = l/s

PRESSURE
lbf/in^2 x 0.069 = bar
bar x 14.504 = lbf/in^2

POWER
hp x 0.746 = kW

$$kW = \frac{N{\cdot}m \times rev/min}{9546}$$

Formulae

Accepted formulae relating torque and tension, based on many tests are:-

For Imperial Sizes

$$M = \frac{P \times D}{60}$$

M = torque lbf·ft
P = bolt tension lbf
D = bolt diameter (ins)

For Metric Sizes

$$M = \frac{P \times D}{5000}$$

M = torque N·m
P = bolt tension Newtons
D = bolt diameter (mm)

These formulae may be used for bolts outside the range of the tables.

Formula for Calculating the Effect of Torque Wrench Extensions

M1 = M2 x L1/L2

Where L1 is the normal length and L2 is the extended length, M1 is the set torque and M2 the actual torque applied to the nut.

Example

The required torque on the fastener is 130 N·m (M2) but what do you set on the torque wrench scale?

L1 = 500 L2 = 650
(units of length not important, this is ratio)

M1 = 130 x 500/650
M1 = 100

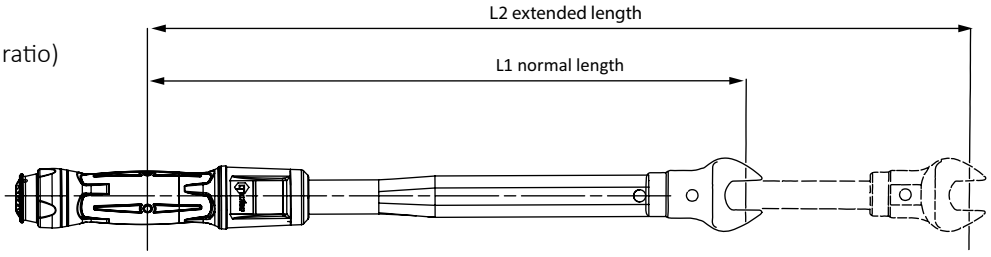

For further information and guidance on converting torque and calculating the effect of torque wrench extensions download our purpose built applications for iPhone and Android.

TORQUE SCREWDRIVER AND TORQUE WRENCHES

Norbar Torque Tools manufacture an extensive range of high quality torque screwdrivers and torque wrenches to cover torque values from 0.3 N·m to 2000 N·m. They are designed and manufactured to exceed international standards for accuracy.

In addition to the normal 'adjustable' torque wrenches, Norbar offer Production 'P' Type versions which can be pre-set and dedicated to a particular application. This setting system is designed to discourage unauthorised alteration.

All Norbar torque wrenches are offered as standard with a quality ratchet. For applications where interchangeable end fittings are required, 'Torque Handles', which allow for interchangeable spanner fittings, are also available in various models up to 650 N·m.

ISO 6789:2017	9
Torque Screwdrivers	11
TT Torque Wrenches	11
TTi Tethered Torque Wrenches	12
TTi Non-Magnetic Torque Wrench	12
NorTorque® Torque Wrenches	13
Slimline Torque Wrenches	15
Model 5 Professional	16
Professional Torque Wrenches	17
Professional 'P' Type Wrenches	21
Large Professional Wrenches	23
Industrial Wrenches	25
Electrode Wrenches	28
ClickTronic® Torque Wrenches	29
NorTronic® Torque Wrenches	31
Insulated Torque Wrenches	32
Spanner End Fittings	33

ISO 6789:2017

Since 1993, ISO6789 has been the international standard for “Assembly tools for screws and nuts – hand torque tools”. The standard now covers a range of topics guiding the design, marking, conformance testing and calibration of hand torque tools. As such, it is a key reference document for torque wrench manufacturers and those re-calibrating torque wrenches in the after sales market. While it is not primarily aimed at torque tool users, some users may benefit from understanding the parameters that torque wrench manufacturers are working to and the standard will be necessary for larger users carrying out their own, in-house testing or calibration.

Norbar's UKAS accredited laboratory has been working to the new standard since September 2017 and was the first laboratory to do so. All of Norbar's torque wrench production will be working to the new standard by the end of February 2018.

What has changed?

The 2003 edition was itself a development of the 1993 edition. The 2003 standard divided requirements into three sections of: design conformance testing; quality conformance testing and recalibration. The intention was to allow different groups of users to identify the relevant clauses for their needs.

The 2017 edition takes this logic even further and divides the standard into two distinct parts:

Part 1 still provides requirements for design and quality control during manufacture, it also provides specifications for documenting conformance of hand torque tools. This documentation is referred to as a declaration of conformance because it is stating that the torque tool conforms to the requirements of the standard.

Part 2 defines the requirements for calibration of torque tools including the establishment of uncertainty budgets and the content of certificates of calibration.

Calibration is defined by ISO as: “a set of operations that establish, under specified conditions, the relationship between values of quantities indicated by a measuring instrument or measuring system ... and the corresponding values realized by standards.”

Calibration does not include adjustment or imply conformance, it provides information for the user to assess and act upon.

Why make it more complex?

The standard is splitting into two parts because it has been recognised that torque tool calibration requirements have moved on since the standard was last published in 2003.

The two new parts can be described as one part which follows closely to the existing standard and one part which provides a consistent framework for calibrating a hand torque tool to the level that exists in accredited calibration laboratories across the world. The titles of the standards help clarify the difference.

EN ISO 6789-1:2017 (Part 1): Requirements and Methods for design conformance testing and quality conformance testing- Minimum requirements for declaration of conformance.

The quality conformance testing performed under Part 1 is the testing performed on a new torque tool during manufacture. The document that manufacturers will now deliver is a “declaration of conformance” rather than a “calibration certificate”. This is because the manufacturer is declaring that the tool conforms to the standard.

EN ISO 6789-2:2017 (Part 2): Requirements for calibration and determination of measurement uncertainty.

The calibration performed under Part 2 is a traceable calibration including steps to understand the factors for that particular torque tool that might cause the calibration values to vary from calibration to calibration. Any UKAS accredited laboratory in the United Kingdom, or indeed any laboratory accredited to ISO 17025 by an appropriate organisation, will be required to establish the uncertainty by conducting these steps. A model of torque tool that the laboratory has not seen before would take about 60 minutes to calibrate to the new standard.

ISO 6789-1:2017 (Part 1) Feature Icon

ISO 6789-2:2017 (Part 2) Feature Icon

How does it affect a torque tool user?

If a current end user was previously content to buy a new torque tool and put it into service on the basis of the “calibration certificate” supplied with the tool by the manufacturer, then they can continue to do so after the standard changes, even though the new piece of paper is now called a “declaration of conformance”.

If the end user’s quality control processes currently require a traceable calibration certificate issued by an accredited laboratory then they will already not accept the current manufacturer’s document but will be paying for a calibration in an accredited laboratory.

If the end user is currently happy with the manufacturer’s piece of paper for a new tool, then a periodic assessment from their in-house facility or from a sub-contractor should provide an equivalent level of confidence in the performance of the tool. Under the new Part 1 these sub-contractors will be able to continue that work as long as they observe the new changes, but they will not be able to call it a calibration and will not be able to issue a “calibration certificate”. They will be able to issue a “declaration of conformance”.

In essence, one of the key changes in the standard is to protect the use of the term “calibration”. It will initially be confusing to both end users and service providers, but the International Standards Organisation has clear definitions of words such as “calibration” and we will have to adapt our thinking to conform.

Torque Wrench Calibrator (TWC)

To help our customers meet the requirements of this new standard we have launched the TWC which enables torque wrench calibration or testing in accordance with ISO 6789-2:2017 if used with T-Box XL™ software version 3.0.0.X and TDMS version 4.0.X. Further details can be found on page 89.

Torque Wrench Calibrator (TWC) manual shown with Counter-Balanced Reaction Post (62272), Flange Mounted Transducer and a T-Box XL™ Meeting the requirements of ISO 6789-2:2017

Further Information

Further information on the new standard can be found on our website through the following link:

www.norbar.com/Quality/ISO-6789

If you have any questions specifically on the new standard please make contact with us here:

ISO6789@norbar.com

TORQUE SCREWDRIVERS

Versatile, accurate and easy torqueing for smaller fasteners and restricted spaces

- Accuracy meets the requirements of ISO6789-1:2017
- Supplied with ¼" hexagon bit holder
- Single scale, either N·m or lbf·in

MODEL		ALL MODELS
Dimensions (mm)	A	155
	B	121
	C	38
	ØD	11
	E	20
	F	31
Weight (Kg)		0.24

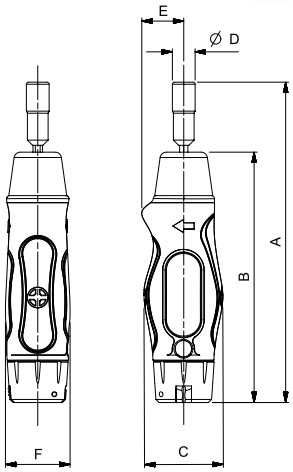

2	ADJUSTABLE N·m
13850	TTs1.5 N·m, ¼", 0.3 - 1.5 N·m
13851	TTs3.0 N·m, ¼", 0.6 - 3 N·m
13852	TTs6.0 N·m, ¼", 1.2 - 6 N·m

2	ADJUSTABLE lbf·in
13853	TTs13 in·lb, ¼", 2.5 - 13 lbf·in
13854	TTs26 in·lb, ¼", 5 - 26 lbf·in
13855	TTs53 in·lb, ¼", 10 - 53 lbf·in

2	PRODUCTION 'P' TYPE
13856	TTs1.5, ¼", 0.3 - 1.5 N·m, 2.5 - 13 lbf·in
13857	TTs3.0, ¼", 0.6 - 3 N·m, 5 - 26 lbf·in
13858	TTs6.0, ¼", 1.2 - 6 N·m, 10 - 53 lbf·in
SQ2222	Pre-set, etch and certify (Allow 3 days delivery for this service)

2	ADJUSTABLE N·m KIT
13700	TTs0.3 - 1.5 N·m Kit with 12 piece bit set and case
13701	TTs0.6 - 3 N·m Kit with 12 piece bit set and case
13702	TTs1.2 - 6 N·m Kit with 12 piece bit set and case
28937	12 Piece ¼", Hex Bit Set

TT TORQUE WRENCHES

For no-nonsense torqueing - comfortable, accurate and easy to use

- Accurate to ±3% of reading which meets the requirements of ISO6789-1:2017
- Micrometer scale for simple and error free setting
- All models feature a lock to prevent accidental adjustment of the set torque
- Handle and lens materials resistant to commonly used industrial chemicals

TTi Reversible Ratchet

TTf Fixed Head

TTfth Torque Handle

2	RATCHET ADJUSTABLE - DUAL SCALE
13830	TTi20 ¼", 4 - 20 N·m, 35 - 180 lbf·in
13831	TTi20 ⅜", 4 - 20 N·m, 35 - 180 lbf·in
13841	TTi50 ⅜", 10 - 50 N·m, 8 - 35 lbf·ft
13842	TTi50 ½", 10 - 50 N·m, 8 - 35 lbf·ft

2	RATCHET ADJUSTABLE - N·m ONLY
13832	TTi20 N·m ¼", 4 - 20 N·m
13833	TTi20 N·m ⅜", 4 - 20 N·m
13843	TTi50 N·m ⅜", 10 - 50 N·m
13844	TTi50 N·m ½", 10 - 50 N·m

2	RATCHET ADJUSTABLE - lbf·ft ONLY
13834	TTi15 ft·lb ¼", 35 - 180 lbf·in
13835	TTi15 ft·lb ⅜", 35 - 180 lbf·in
13845	TTi35 ft·lb ⅜", 8 - 35 lbf·ft
13846	TTi35 ft·lb ½", 8 - 35 lbf·ft

2	FIXED HEAD ADJUSTABLE
13836	TTf 20 ⅜", 4 - 20 N·m, 35 - 180 lbf·in
13837	TTf 20 N·m ⅜", 4 - 20 N·m (N·m ONLY)
13838	TTf 15 ft·lb ⅜", 35 - 180 lbf·in (lbf·in ONLY)

2	FEMALE TORQUE HANDLE ADJUSTABLE
13839	TTfth 20 9x12 mm, 4 - 20 N·m, 35 - 180 lbf·in
13847	TTfth 50 9x12 mm, 10 - 50 N·m, 8 - 35 lbf·ft
13840	TTfth 20 N·m 9x12 mm, 4 - 20 N·m (N·m ONLY)
13848	TTfth 50 N·m 9x12 mm, 10 - 50 N·m (N·m ONLY)

TTi TETHERED TORQUE WRENCHES

Features inbuilt tethering point to secure the tool for safe work at height and double sided locking plunger square

- Pinned head in line with DROPS recommendation for ultra safe handling of sockets when working at height
- Built on a trusted, versatile torque wrench design
- Micrometer scale for simple and error free setting
- Handle and lens materials resistant to commonly used industrial chemicals
- Lock feature helps prevent accidental adjustment of the set torque

2	RATCHET ADJUSTABLE - DUAL SCALE
13723	TTi100, ⅜", 20 - 100 N·m, 15 - 75 lbf·ft
13724	TTi200, ½", 40 - 200 N·m, 30 - 150 lbf·ft
13725	TTi300, ½", 60 - 300 N·m, 45 - 220 lbf·ft

TTi NON-MAGNETIC TORQUE WRENCHES

Carefully selected and tested materials replace the ferrous components present in standard torque wrenches, thereby giving an extremely low magnetic footprint. Being based on the TT range of torque wrenches means that they also retain the high standards of Norbar's other torque wrenches. Perfect for MRI scanner applications.

4	ADJUSTABLE - DUAL SCALE
13900	TTi20 ¼" Non-Mag , 4 - 20 N·m, 35 - 180 lbf·in
13901	TTi20 ⅜" Non-Mag, 4 - 20 N·m, 35 - 180 lbf·in
13902	TTi50 ⅜" Non-Mag, 10 - 50 N·m, 8 - 35 lbf·ft
13903	TTi50 ½" Non-Mag, 10 - 50 N·m, 8 - 35 lbf·ft

TT Torque Wrenches

Model		TTi20	TTi50	TTi100	TTi200	TTi300	TTf20	TTfth20	TTfth50
Part Number/s		13830 13831 13832 13833 13834 13835 13900 13901	13841 13842 13843 13844 13845 13846 13902 13903	13723	13724	13725	13836 13837 13838	13839 13840	13847 13848
Dimensions (mm)	A	232	328	401	501	607	225	214	310
	B	217	313	378	478	581	217	204	300
	C	166	263	284	384	487	166	153	250
	ØD	30	30	46	46	52	20	22	22
	E	31	31	60	60	60	28	17	17
	F	20	20	28	28	28	18	N/A	N/A
	G	N/A	N/A	16	16	16	N/A	N/A	N/A
Weight (Kg)		0.5	0.7	1.1	1.5	1.8	0.5	0.4	0.6

TTi Ratchet

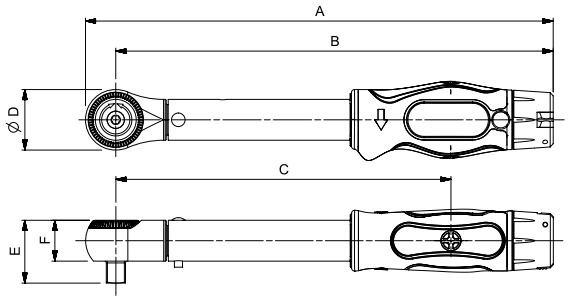

TTf Fixed Head

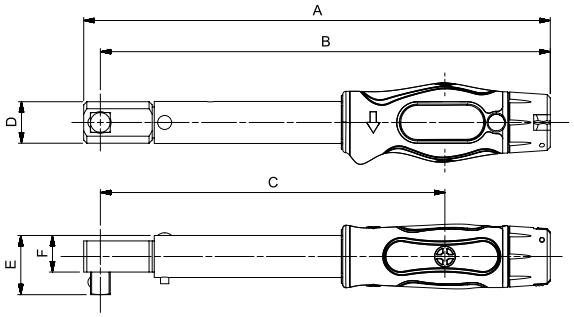

TTi Tethered Torque Wrench

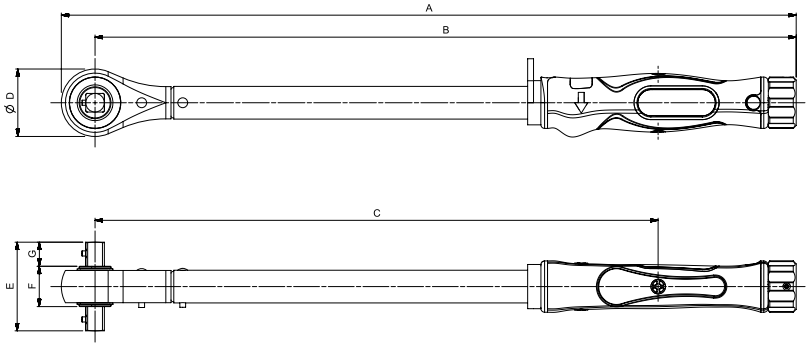

TTfth Female Torque Handle

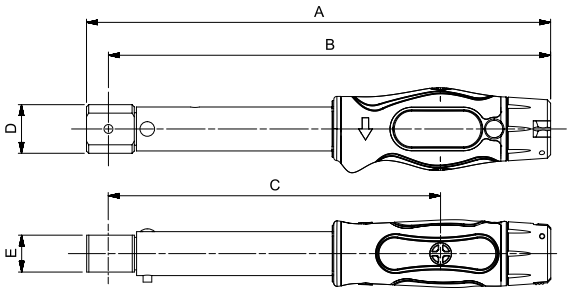

NORTORQUE®

The NorTorque® utilises Norbar's proven mechanism and internal components and incorporates them into a purposeful and attractive torque wrench that will delight a wide range of users from professional mechanics to hobby enthusiasts

- Accurate to ±3% of reading which meets the requirements of ISO6789-1:2017
- Light and fast adjustment saves operator time and effort
- Micrometer scale applying to the primary torque units (N·m on a dual scale wrench) for simple and error free setting
- 'Push-through' ratchets allow torque control in both the clockwise and anti-clockwise directions
- Tough ratchets with narrow engagement angles allow for easy positioning of the tool in confined spaces. 5° for models up to 200 N·m and 6° for models 300 N·m and above
- Push/pull lock is fast and intuitive to use and prevents accidental adjustment of the set torque
- Convenient hanger feature for tool storage also aids wrench unlocking and adjustment

2	RATCHET ADJUSTABLE - DUAL SCALE
130101⁺	Model 60, ⅜", 12 - 60 N·m, 10 - 45 lbf·ft
130103⁻	Model 100, ½", 20 - 100 N·m, 15 - 75 lbf·ft
130104	Model 200, ½", 40 - 200 N·m, 30 - 150 lbf·ft
130105	Model 300, ½", 60 - 300 N·m, 45 - 220 lbf·ft
130106	Model 340, ½", 60 - 340 N·m, 45 - 250 lbf·ft

2	RATCHET ADJUSTABLE - N·m ONLY
130111⁺	Model 60, ⅜", 12 - 60 N·m
130113⁻	Model 100, ½", 20 - 100 N·m
130114	Model 200, ½", 40 - 200 N·m
130115	Model 300, ½", 60 - 300 N·m
130116	Model 340, ½", 60 - 340 N·m

⁺ Supplied with ½" sq. dr. adaptor

⁻ Supplied with ⅜" sq. dr. adaptor

2	FEMALE TORQUE HANDLE ADJUSTABLE - DUAL SCALE
130121	Model 60, 9 x 12mm , 12 - 60 N·m, 10 - 45 lbf·ft
130123	Model 100, 9 x 12mm, 20 - 100 N·m, 15 - 75 lbf·ft
130125	Model 200, 9 x 12mm, 40 - 200 N·m, 30 - 150 lbf·ft
130126	Model 200, 14 x 18mm, 40 - 200 N·m, 30 - 150 lbf·ft
130127	Model 300, 14 x 18mm, 60 - 300 N·m, 45 - 220 lbf·ft
130128	Model 340, 14 x 18mm, 60 - 340 N·m, 45 - 250 lbf·ft

2	FEMALE TORQUE HANDLE ADJUSTABLE - N·m ONLY
130131	Model 60, 9 x 12mm , 12 - 60 N·m
130133	Model 100, 9 x 12mm, 20 - 100 N·m
130135	Model 200, 9 x 12mm, 40 - 200 N·m
130136	Model 200, 14 x 18mm, 40 - 200 N·m
130137	Model 300, 14 x 18mm, 60 - 300 N·m
130138	Model 340, 14 x 18mm, 60 - 340 N·m

Primary Scale

Micrometer Scale

Push-Through Ratchet

Rapid Adjustment with convenient hanger

Female Torque Handle

16mm Spigot End

2	TORQUE HANDLE ADJUSTABLE 16mm SPIGOT - DUAL SCALE
130141	Model 60, 16mm spigot, 12 - 60 N·m, 10 - 45 lbf·ft
130142	Model 100, 16mm spigot, 20 - 100 N·m, 15 - 75 lbf·ft
130143	Model 200, 16mm spigot, 40 - 200 N·m, 30 - 150 lbf·ft
130144	Model 300, 16mm spigot, 60 - 300 N·m, 45 - 220 lbf·ft

2	TORQUE HANDLE ADJUSTABLE 16mm SPIGOT - N·m ONLY
130161	Model 60, 16mm spigot, 12 - 60 N·m
130162	Model 100, 16mm spigot, 20 - 100 N·m
130163	Model 200, 16mm spigot, 40 - 200 N·m
130164	Model 300, 16mm spigot, 60 - 300 N·m

NORTORQUE®

Ratchet Adjustable

Model		NorTorque 60	NorTorque 100	NorTorque 200	NorTorque 300	NorTorque 340
Part Number/s		130101 130111	130103 130113	130104 130114	130105 130115	130106 130116
Dimensions (mm)	A	328	375	459	587	679
	B	310	354	437	562	654
	C	209	252	335	460	552
	ØD	36	42	45	52	52
	E	34	38	45	45	45
	F	21	22	25	25	25
Weight (Kg)		0.7	0.8	1.0	1.4	1.55

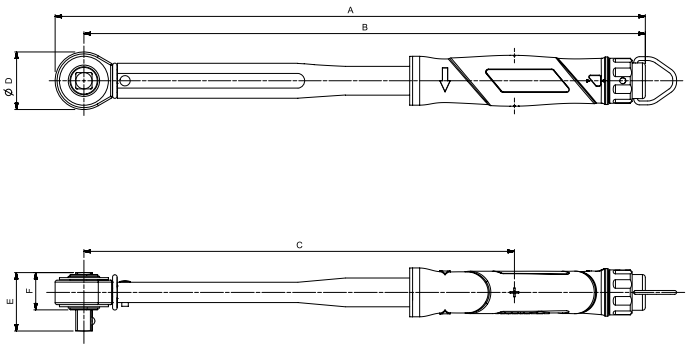

Torque Handle Adjustable 16mm Spigot

Model		NorTorque 60	NorTorque 100	NorTorque 200	NorTorque 300
Part Number/s		130141 130161	130142 130162	130143 130163	130144 130164
Dimensions (mm)	A	317	357	439	564
	B	310	350	433	557
	C	208	248	331	455
	ØD	16	16	16	16
Weight (Kg)		0.6	0.7	0.8	1.1

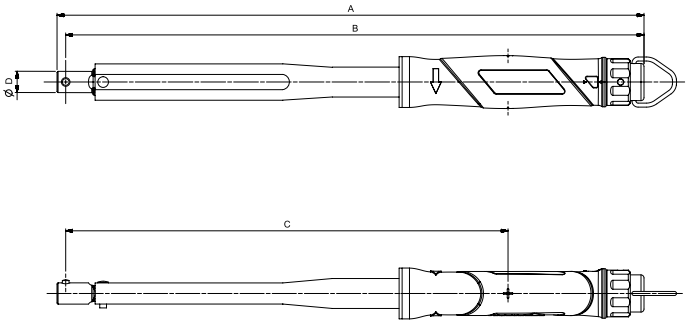

Female Torque Handle Adjustable

Model		NorTorque 60	NorTorque 100	NorTorque 200 9 x 12mm	NorTorque 200 14 x 18mm	NorTorque 300	NorTorque 340
Part Number/s		130121 130131	130123 130133	130125 130135	130126 130136	130127 130137	130128 130138
Dimensions (mm)	A	319	360	437	446	566	658
	B	308	348	426	430	550	642
	C	206	247	324	329	448	540
	D	22	22	24	33	36	36
	E	20	20	20	25	28	28
Weight (Kg)		0.6	0.7	0.8	0.9	1.2	1.3

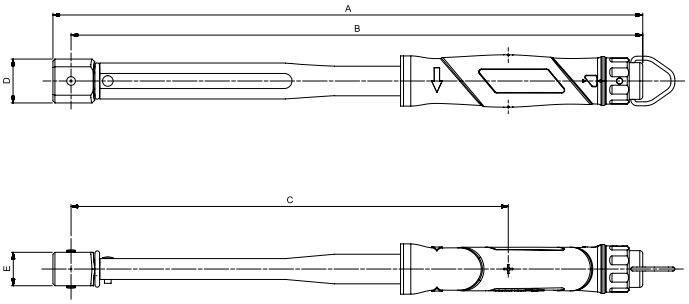

SLIMLINE™ TORQUE WRENCHES

- Accurate to ±3% of reading which meets the requirements of ISO6789-1:2017
- Unmistakable signal when set torque is reached
- High quality 72 tooth ratchet allows use in confined spaces
- Fixed head version has a push-through square for left and right handed torque tightening
- Moulded grip aids correct hand location and operator comfort

2	ADJUSTABLE RATCHET - DUAL SCALE
11123	SL0, ¼", 4 - 20 N·m, 40 - 180 lbf·in
11087	SL0, ⅜", 4 - 20 N·m, 40 - 180 lbf·in

2	ADJUSTABLE - FIXED HEAD- DUAL SCALE
11125	SL0, ⅜" Fixed Head, 4 - 20 N·m, 40 - 180 lbf·in

2	TORQUE HANDLE ADJUSTABLE - DUAL SCALE
11126	SL0 16mm spigot, 4 - 20 N·m, 40 - 180 lbf·in
11122	SL0 9 x 12mm female, 4 - 20 N·m, 40 - 180 lbf·in

Production 'P' type versions are designed to discourage unauthorised alteration. They have no scale and so must be set against a torque testing device such as Norbar's TruCheck™ - see page 78.

2	PRODUCTION 'P' TYPE (Must be set using a Torque Tester, see pages 76-83)
11089	SL0 ⅜" Fixed Head, 1 - 20 N·m, 10 - 180 lbf·in
11085	SL0 ¼", 1 - 20 N·m, 10 - 180 lbf·in
11086	SL0 ⅜", 1 - 20 N·m, 10 - 180 lbf·in
11090	SL0 16mm spigot, 1 - 20 N·m, 10 - 180 lbf·in
11088	SL0 9 x 12mm female, 1 - 20 N·m, 10 - 180 lbf·in
SQ2222	Pre-set, etch and certify (Allow 3 days delivery for this service)

SLO Ratchet

Model		SL0 ¼"	SL0 ⅜"
Part Number/s		11123 11085	11087 11086
Dimensions (mm)	A	219	219
	B	204	204
	C	146	146
	ØD	30	30
	E	26	26
	F	19	19
Weight (Kg)		0.4	0.4

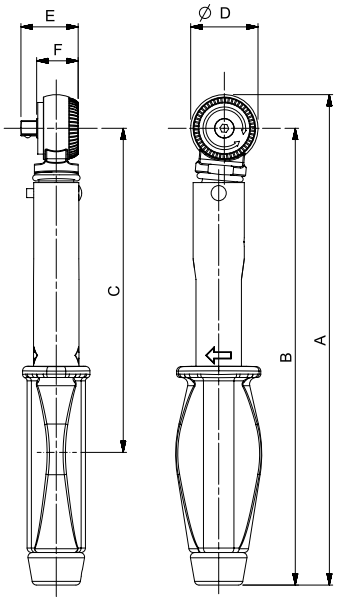

SLO Spigot Torque Handle

Model		SL0 Spigot
Part Number/s		11126 11090
Dimensions (mm)	A	206
	B	199
	C	143
	ØD	16
Weight (Kg)		0.4

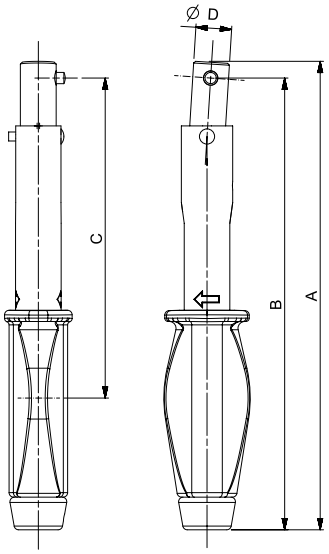

SLIMLINE™ TORQUE WRENCHES

SLO Fixed Head

Model		SLO ⅜" Fixed Head
Part Number/s		11125 11089
Dimensions (mm)	A	213
	B	203
	C	145
	D	19
	E	30
	F	17
Weight (Kg)		0.4

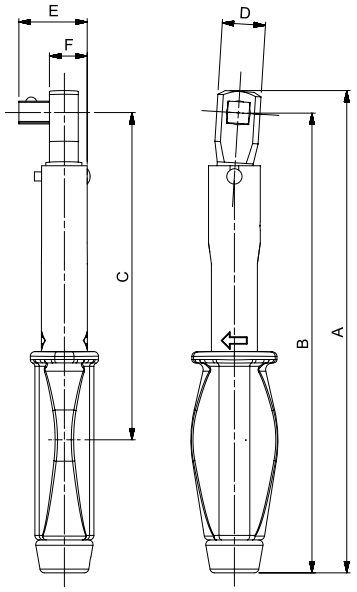

SLO Female Torque Handle

Model		SL0 FTH
Part Number/s		11122 11088
Dimensions (mm)	A	205
	B	194
	C	135
	D	22
	E	20
Weight (Kg)		0.4

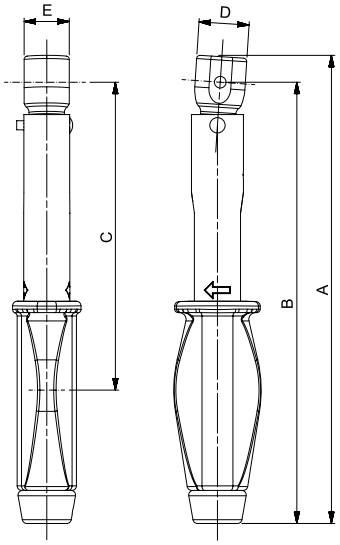

PROFESSIONAL TORQUE WRENCHES MODEL 5

The Model 5 is a unique torque wrench that offers the convenience of interchangeable ¼" hexagon bits. (ISO 1173:2001 Form C drive bits).

- Accuracy meets the requirements of ISO6789-1:2017
- Non-length dependent. The Model 5 remains accurate regardless of hand position
- Supplied in a storage case. The case allows space for the storage of additional drive bits, and optional stepless ratchet

2	ADJUSTABLE
13001	Pro 5, ¼" female hex, 1 - 5 N·m
13002	Pro 5, ¼" female hex, 10 - 50 lbf·in
13003	Pro 5, ¼" female hex, 10 - 50 kgf·cm

Model		Adjustable	'P' Type
Part Number/s		13001 13002 13003	13004 13005 13006
Dimensions (mm)	A	165	157
	B	155	147
	C	102	102
	D	18	18
	E	25	25
	F	13	13
	G	3	3
Weight (Kg)		0.12	0.12

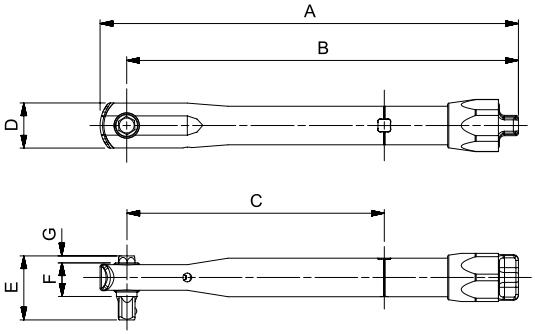

Also available as Production 'P' Types, preventing unauthorised alteration of torque setting. No external calibration equipment is required to set the Model 5 'P' Type.

2	PRODUCTION 'P' TYPE
13004	Pro 5, ¼" female hex, 1 - 5 N·m
13005	Pro 5, ¼" female hex, 10 - 50 lbf·in
13006	Pro 5, ⅜" female hex, 10 - 50 kgf·cm

8	MODEL 5 ACCESSORY
13122	Stepless Ratchet ¼" female hex

8	MODEL 5 SPARES
28900	¼" Hex ¼" male square drive

Model 5 'P' Type in storage case

PROFESSIONAL TORQUE WRENCHES

New Models 15 & 25

Since its original, award winning launch in 1984 and extensive face-lift in 2000, Norbar's Professional torque wrench range has become one of the most popular wrench ranges available worldwide. In this re-engineered version, the core principles of accuracy, durability and comfort are carried over but almost every component part is new and improved.

- Accurate to ±3% of reading which meets the requirements of ISO6789-2:2017
- Large scale for better visibility and more accurate setting
- Fast scale adjustment reducing the effort required to adjust. If you adjust your wrench regularly, you can do more work

Compared with other torque wrenches:

Norbar's 'harmonic drive' scale provides a long scale length for good resolution and accurate setting in both scale units. By contrast, micrometer type scales allow accurate setting in the primary scale unit but relatively poor accuracy of setting in the secondary units because of limited resolution. The new Professional wrench is amongst the easiest wrenches on the market to accurately set.

Timestrip® Feature

Torque wrenches should be calibrated once a year as a minimum, more frequently in harsh environments and with high levels of usage. Norbar's Timestrip® gives a visual indication that the wrench is due for re-calibration and has 3, 6, 9 and 12 month graduations. (Timestrip® is a registered trademark of Timestrip UK Ltd).

Unlocked

Locked

Automotive Ratchet

Industrial Ratchet

Timestrip®

Professional Scale

Female Torque Handle

16mm Spigot End

PROFESSIONAL TORQUE WRENCHES

'Mushroom' Square Drive

2	INDUSTRIAL RATCHET ('Mushroom' head) - DUAL SCALE
15002⁺	Pro 50, ⅜", 10 - 50 N·m, 7.5 - 37.5 lbf·ft
15003⁻	Pro 100, ½", 20 - 100 N·m, 15 - 75 lbf·ft
15004	Pro 200, ½", 40 - 200 N·m, 30 - 150 lbf·ft
15005	Pro 300, ½", 60 - 300 N·m, 45 - 220 lbf·ft
15006	Pro 340, ½", 60 - 340 N·m, 45 - 250 lbf·ft
15007*	Pro 400, ¾", 80 - 400 N·m, 60 - 300 lbf·ft

2	INDUSTRIAL RATCHET ('Mushroom' head) - N·m ONLY
15042⁺	Pro 50, ⅜", 10 - 50 N·m
15043⁻	Pro 100, ½", 20 - 100 N·m
15044	Pro 200, ½", 40 - 200 N·m
15045	Pro 300, ½", 60 - 300 N·m
15046	Pro 340, ½", 60 - 340 N·m
15047*	Pro 400, ¾", 80 - 400 N·m

2	INDUSTRIAL RATCHET ('Mushroom' head) - lbf·ft ONLY
15172⁺	Pro 50, ⅜", 7.5 - 37.5 lbf·ft
15173⁻	Pro 100, ½", 15 - 75 lbf·ft
15174	Pro 200, ½", 30 - 150 lbf·ft
15175	Pro 300, ½", 45 - 220 lbf·ft
15176	Pro 340, ½", 45 - 250 lbf·ft
15177*	Pro 400, ¾", 60 - 300 lbf·ft

2	INDUSTRIAL RATCHET ('Mushroom' head) - lbf·in ONLY
15052⁺	Pro 50, ⅜", 90 - 440 lbf·in
15053⁻	Pro 100, ½", 200 - 900 lbf·in
15054	Pro 200, ½", 400 - 1800 lbf·in
15055	Pro 300, ½", 500 - 2500 lbf·in
15056	Pro 340, ½", 500 - 3000 lbf·in
15057*	Pro 400, ¾", 700 - 3500 lbf·in

⁺ Supplied with ½" sq. dr. adaptor

⁻ Supplied with ⅜" sq. dr. adaptor

* Model 400 supplied with Reversible Industrial Ratchet

2	AUTOMOTIVE RATCHET (Reversible) - DUAL SCALE
15008	Pro 15, ¼", 3 - 15 N·m, 27 - 132 lbf·in
15009	Pro 15, ⅜", 3 - 15 N·m, 27 - 132 lbf·in
15010	Pro 25, ¼", 5 - 25 N·m, 44 - 220 lbf·in
15011	Pro 25, ⅜", 5 - 25 N·m, 44 - 220 lbf·in
15012	Pro 50, ⅜", 10 - 50 N·m, 7.5 - 37.5 lbf·ft
15013	Pro 50, ½", 10 - 50 N·m, 7.5 - 37.5 lbf·ft
15014	Pro 100, ⅜", 20 - 100 N·m, 15 - 75 lbf·ft
15015	Pro 100, ½", 20 - 100 N·m, 15 - 75 lbf·ft
15016	Pro 200, ½", 40 - 200 N·m, 30 - 150 lbf·ft

2	AUTOMOTIVE RATCHET (Reversible) - N·m ONLY
15018	Pro 15, ¼", 3 - 15 N·m
15019	Pro 15, ⅜", 3 - 15 N·m
15020	Pro 25, ¼", 5 - 25 N·m
15021	Pro 25, ⅜", 5 - 25 N·m
15022	Pro 50, ⅜", 10 - 50 N·m
15023	Pro 50, ½", 10 - 50 N·m
15024	Pro 100, ⅜", 20 - 100 N·m
15025	Pro 100, ½", 20 - 100 N·m
15026	Pro 200, ½", 40 - 200 N·m

2	AUTOMOTIVE RATCHET (Reversible) - lbf·ft ONLY
15142	Pro 50, ⅜", 7.5 - 37.5 lbf·ft
15143	Pro 50, ½", 7.5 - 37.5 lbf·ft
15144	Pro 100, ⅜", 15 - 75 lbf·ft
15145	Pro 100, ½", 15 - 75 lbf·ft
15146	Pro 200, ½", 30 - 150 lbf·ft

2	AUTOMOTIVE RATCHET (Reversible) - lbf·in ONLY
15028	Pro 15, ¼", 27 - 132 lbf·in
15029	Pro 15, ⅜", 27 - 132 lbf·in
15030	Pro 25, ¼", 44 - 220 lbf·in
15031	Pro 25, ⅜", 44 - 220 lbf·in
15032	Pro 50, ⅜", 90 - 440 lbf·in
15033	Pro 50, ½", 90 - 440 lbf·in
15034	Pro 100, ⅜", 200 - 900 lbf·in
15035	Pro 100, ½", 200 - 900 lbf·in
15036	Pro 200, ½", 400 - 1800 lbf·in

PROFESSIONAL TORQUE WRENCHES

2	TORQUE HANDLE ADJUSTABLE 16mm SPIGOT - DUAL SCALE
15060	Pro 15, 16mm spigot, 3 - 15 N·m, 27 - 132 lbf·in
15061	Pro 25, 16mm spigot, 5 - 25 N·m, 44 - 220 lbf·in
15062	Pro 50, 16mm spigot, 10 - 50 N·m, 7.5 - 37.5 lbf·ft
15063	Pro 100, 16mm spigot, 20 - 100 N·m, 15 - 75 lbf·ft
15064	Pro 200, 16mm spigot, 40 - 200 N·m, 30 - 150 lbf·ft
15065	Pro 300, 16mm spigot, 60 - 300 N·m, 45 - 220 lbf·ft

2	TORQUE HANDLE ADJUSTABLE 16mm SPIGOT - N·m ONLY
15070	Pro 15, 16mm spigot, 3 - 15 N·m
15071	Pro 25, 16mm spigot, 5 - 25 N·m
15072	Pro 50, 16mm spigot, 10 - 50 N·m
15073	Pro 100, 16mm spigot, 20 - 100 N·m
15074	Pro 200, 16mm spigot, 40 - 200 N·m
15075	Pro 300, 16mm spigot, 60 - 300 N·m

2	TORQUE HANDLE ADJUSTABLE 16mm SPIGOT - lbf·ft ONLY
15082	Pro 50, 16mm spigot, 7.5 - 37.5 lbf·ft
15083	Pro 100, 16mm spigot, 15 - 75 lbf·ft
15084	Pro 200, 16mm spigot, 30 - 150 lbf·ft
15085	Pro 300, 16mm spigot, 45 - 220 lbf·ft

2	TORQUE HANDLE ADJUSTABLE 16mm SPIGOT - lbf·in ONLY
15090	Pro 15, 16mm spigot, 27 - 132 lbf·in
15091	Pro 25, 16mm spigot, 44 - 220 lbf·in
15092	Pro 50, 16mm spigot, 90 - 440 lbf·in
15093	Pro 100, 16mm spigot, 200 - 900 lbf·in
15094	Pro 200, 16mm spigot, 400 - 1800 lbf·in
15095	Pro 300, 16mm spigot, 500 - 2500 lbf·in

2	FEMALE TORQUE HANDLE ADJUSTABLE - DUAL SCALE
15100	Pro 15, 9 x 12mm, 3 - 15 N·m, 27 - 132 lbf·in
15101	Pro 25, 9 x 12mm, 5 - 25 N·m, 44 - 220 lbf·in
15102	Pro 50, 9 x 12mm, 10 - 50 N·m, 7.5 - 37.5 lbf·ft
15103	Pro 100, 9 x 12 mm, 20 - 100 N·m, 15 - 75 lbf·ft
15104	Pro 200, 9 x 12 mm, 40 - 200 N·m, 30 - 150 lbf·ft
15105	Pro 200, 14 x 18 mm, 40 - 200 N·m, 30 - 150 lbf·ft
15106	Pro 300, 14 x 18 mm, 60 - 300 N·m, 45 - 220 lbf·ft
15107	Pro 340, 14 x 18 mm, 60 - 340 N·m, 45 - 250 lbf·ft
15108	Pro 400, 14 x 18 mm, 80 - 400 N·m, 60 - 300 lbf·ft

2	FEMALE TORQUE HANDLE ADJUSTABLE - N·m ONLY
15110	Pro 15, 9 x 12mm, 3 - 15 N·m
15111	Pro 25, 9 x 12mm, 5 - 25 N·m
15112	Pro 50, 9 x 12mm, 10 - 50 N·m
15113	Pro 100, 9 x 12 mm, 20 - 100 N·m
15114	Pro 200, 9 x 12 mm, 40 - 200 N·m
15115	Pro 200, 14 x 18 mm, 40 - 200 N·m
15116	Pro 300, 14 x 18 mm, 60 - 300 N·m
15117	Pro 340, 14 x 18 mm, 60 - 340 N·m
15118	Pro 400, 14 x 18 mm, 80 - 400 N·m

2	FEMALE TORQUE HANDLE ADJUSTABLE - lbf·ft ONLY
15122	Pro 50, 9 x 12mm, 7.5 - 37.5 lbf·ft
15123	Pro 100, 9 x 12 mm, 15 - 75 lbf·ft
15124	Pro 200, 9 x 12 mm, 30 - 150 lbf·ft
15125	Pro 200, 14 x 18 mm, 30 - 150 lbf·ft
15126	Pro 300, 14 x 18 mm, 45 - 220 lbf·ft
15127	Pro 340, 14 x 18 mm, 45 - 250 lbf·ft
15128	Pro 400, 14 x 18 mm, 60 - 300 lbf·ft

2	FEMALE TORQUE HANDLE ADJUSTABLE - lbf·in ONLY
15130	Pro 15, 9 x 12mm, 27 - 132 lbf·in
15131	Pro 25, 9 x 12 mm, 44 - 220 lbf·in
15132	Pro 50, 9 x 12 mm, 90 - 440 lbf·in
15133	Pro 100, 9 x 12 mm, 200 - 900 lbf·in
15134	Pro 200, 9 x 12 mm, 400 - 1800 lbf·in
15135	Pro 200, 14 x 18 mm, 400 - 1800 lbf·in
15136	Pro 300, 14 x 18 mm, 500 - 2500 lbf·in
15137	Pro 340, 14 x 18 mm, 500 - 3000 lbf·in
15138	Pro 400, 14 x 18 mm, 700 - 3500 lbf·in

PROFESSIONAL TORQUE WRENCHES

Industrial Ratchet

Model		Pro 50	Pro 100	Pro 200	Pro 300	Pro 340	Pro 400
Part Number/s		15002 15042 15172 15052	15003 15043 15173 15053	15004 15044 15174 15054	15005 15045 15175 15055	15006 15046 15176 15056	15007 15047 15177 15057
Dimensions (mm)	A	335	387	470	593	685	686
	B	317	364	447	567	659	661
	C	231	278	361	480	572	574
	ØD	35	45	45	52	52	51
	E	37	48	48	48	48	47
	F	26	32	32	33	33	24
Weight (Kg)		0.7	0.94	1.07	1.42	1.48	1.93

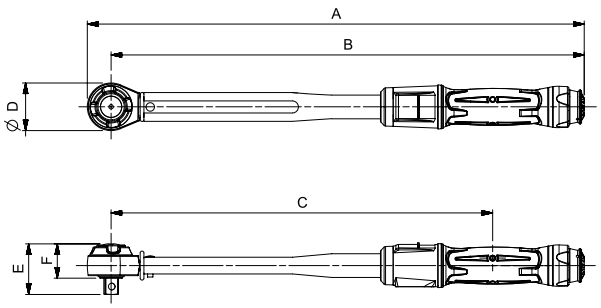

Automotive Ratchet

Model		Pro 15 Pro 25	Pro 50 ⅜"	Pro 50 ½"	Pro 100 ⅜"	Pro 100 ⅜"	Pro 200
Part Number/s		15008, 15009, 15010, 15011, 15018, 15019, 15020, 15021, 15028, 15029, 15030, 15031	15012 15022 15142 15032	15013 15023 15143 15033	15014 15024 15144 15034	15015 15025 15145 15035	15016 15026 15146 15036
Dimensions (mm)	A	221	327	327	367	367	465
	B	209	312	312	352	352	444
	C	140	226	226	266	266	358
	ØD	25	30	30	30	30	43
	E	25	33	38	33	38	46
	F	18	22	22	22	22	30
Weight (Kg)		0.26	0.69	0.69	0.76	0.76	1.04

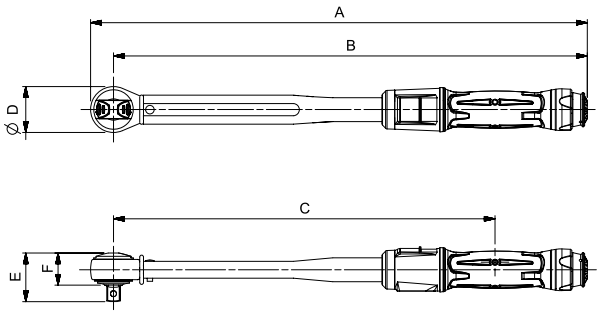

Spigot Torque Handle

Model		Pro 15 Pro 25	Pro 50	Pro 100	Pro 200	Pro 300
Part Number/s		15060 15061 15070 15071 15090 15091	15062 15072 15082 15092	15063 15073 15083 15093	15064 15074 15084 15094	15065 15075 15085 15095
Dimensions (mm)	A	223	322	363	445	569
	B	216	316	356	438	563
	C	148	229	269	351	476
	ØD	16	16	16	16	16
Weight (Kg)		0.26	0.62	0.7	0.85	1.17

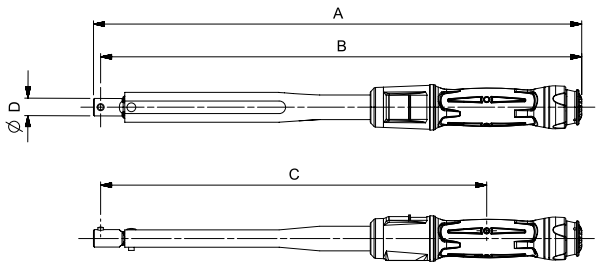

Female Torque Handle

Model		Pro 15 Pro 25	Pro 50	Pro 100	Pro 200 9 x 12mm	Pro 200 14 x 18mm	Pro 300	Pro 340	Pro 400
Part Number/s		15100 15101 15110 15111 15130 15131	15102 15112 15122 15132	15103 15113 15123 15133	15104 15114 15124 15134	15105 15115 15125 15135	15106 15116 15126 15136	15107 15117 15127 15137	15108 15118 15128 15138
Dimensions (mm)	A	218	325	365	442	453	570	662	664
	B	204	314	354	431	440	557	649	649
	C	139	227	267	345	353	440	562	563
	D	22	22	22	25	34	34	34	32
	E	20	20	20	20	26	28	28	24
Weight (Kg)		0.26	20	20	20	25.5	25.5	25.5	24

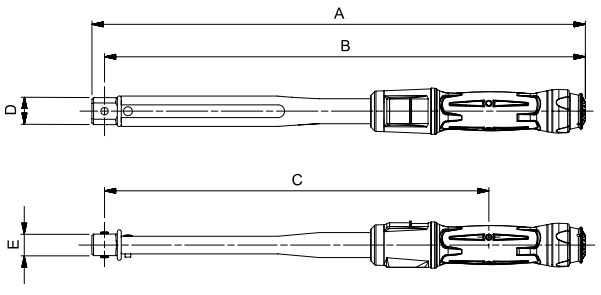

PROFESSIONAL ‘P’ TYPE TORQUE WRENCHES

For production line applications requiring a sealed torque setting. ‘P’ Type wrenches have no scale and must be set against a suitable torque measuring device (see pages 76 - 83).

- Accurate to ±3% of reading which meets the requirements of ISO6789-1:2017
- Colour coded adjustment seals and locking tool provided
- On request ‘P’ Type wrenches can be set, marked with the setting and certified for production line applications requiring a sealed torque setting

Setting a 'P' Type Torque Wrench

- Push-through ratchet allows clockwise and anti-clockwise torque control

2	PRODUCTION ‘P’ TYPE - INDUSTRIAL RATCHET (Push-through square)
13051	Pro 60, ⅜", 12 - 60 N·m, 5 - 45 lbf·ft
13052	Pro 60, ½", 12 - 60 N·m, 5 - 45 lbf·ft
13053	Pro 100, ⅜", 20 - 100 N·m, 15 - 75 lbf·ft
13054	Pro 100, ½", 20 - 100 N·m, 15 - 75 lbf·ft
13055	Pro 200, ½", 40 - 200 N·m, 30 - 150 lbf·ft
13057	Pro 300, ½", 60 - 300 N·m, 45 - 220 lbf·ft
13056	Pro 400, ¾" 80 - 400 N·m, 60 - 300 lbf·ft
11698	Domed End Cap
SQ2222	Pre-set, etch and certify (Allow 3 days delivery for this service)

2	TORQUE HANDLE PRODUCTION ‘P’ TYPE 16mm SPIGOT
11167	Pro 60, 16mm spigot, 12 - 60 N·m, 5 - 45 lbf·ft
11143	Pro 100, 16mm spigot, 20 - 100 N·m, 15 - 75 lbf·ft
11144	Pro 200, 16mm spigot, 40 - 200 N·m, 30 - 150 lbf·ft
11117	Pro 300, 16mm spigot, 60 - 300 N·m, 45 - 220 lbf·ft
SQ2222	Pre-set, etch and certify (Allow 3 days delivery for this service)

- Reversible, 72 tooth ratchet

2	PRODUCTION ‘P’ TYPE AUTOMOTIVE RATCHET (Reversible)
11164	Pro 60, ⅜", 12 - 60 N·m, 5 - 45 lbf·ft
11171	Pro 60, ½", 12 - 60 N·m, 5 - 45 lbf·ft
11138	Pro 100, ⅜", 20 - 100 N·m, 15 - 75 lbf·ft
11139	Pro 100, ½", 20 - 100 N·m, 15 - 75 lbf·ft
11140	Pro 200, ½", 40 - 200 N·m, 30 - 150 lbf·ft
SQ2222	Pre-set, etch and certify (Allow 3 days delivery for this service)

2	FEMALE TORQUE HANDLE PRODUCTION ‘P’ TYPE
11170	Pro 60, 9 x 12mm, 12 - 60 N·m, 5 - 45 lbf·ft
11150	Pro 100, 9 x 12mm, 20 - 100 N·m, 15 - 75 lbf·ft
11151	Pro 200, 9 x 12mm, 40 - 200 N·m, 30 - 150 lbf·ft
11152	Pro 200, 14 x 18mm, 40 - 200 N·m, 30 - 150 lbf·ft
11153	Pro 300, 14 x 18mm, 60 - 300 N·m, 45 - 220 lbf·ft
13068	Pro 400, 14 x 18mm, 80 - 400 N·m, 60 - 300 lbf·ft
SQ2222	Pre-set, etch and certify (Allow 3 days delivery for this service)

PROFESSIONAL 'P' TYPE TORQUE WRENCHES

Industrial Ratchet

Model		Model 60, ⅜"	Model 60, ½"	Model 100, ⅜"	Model 100, ½"	Model 200, ½"	Model 300, ½"	Model 400, ½"
Part Number/s		13051	13052	13053	13054	13055	13057	13056
Dimensions (mm)	A	295	301	335	342	425	668	675
	B	277	281	317	321	403	641	649
	C	212	216	252	256	338	577	584
	ØD	36	42	36	42	45	54	52
	E	34	38	34	38	46	46	51
	F	21	23	21	22	29	29	28
Weight (Kg)		0.62	0.69	0.68	0.74	0.96	1.24	2.04

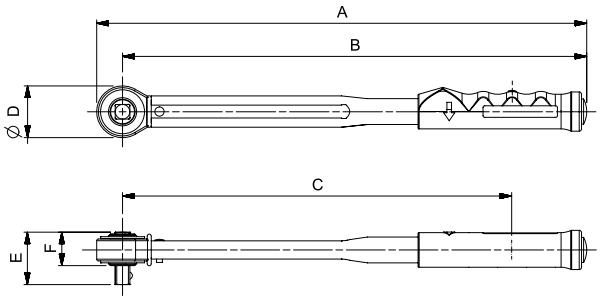

Automotive Ratchet

Model		Model 60, ⅜"	Model 60, ½"	Model 100, ⅜"	Model 100, ½"	Model 200, ½"
Part Number/s		11164	11171	11138	11139	11140
Dimensions (mm)	A	289	289	329	329	425
	B	274	274	314	314	404
	C	209	209	249	249	339
	ØD	30	30	30	30	42
	E	33	38	33	38	43
	F	22	22	22	22	27
Weight (Kg)		0.6	0.6	0.69	0.69	1

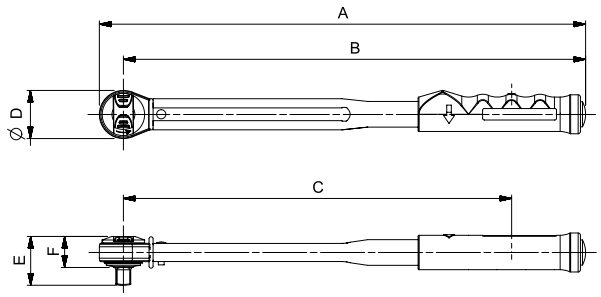

Spigot Torque Handle

Model		Model 60	Model 100	Model 200	Model 300
Part Number/s		11167	11143	11144	11117
Dimensions (mm)	A	283	324	405	643
	B	277	317	399	637
	C	212	252	334	572
	ØD	16	16	16	16
Weight (Kg)		0.55	0.6	0.78	1.13

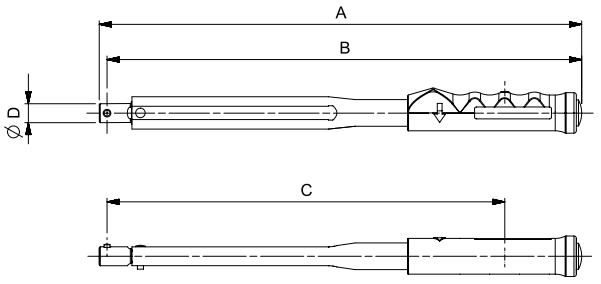

Female Torque Handle

Model		Model 60	Model 100	Model 200	Model 200	Model 300	Model 400
Part Number/s		11170	11150	11151	11152	11153	13068
Dimensions (mm)	A	286	326	403	414	534	652
	B	274	314	392	400	518	637
	C	210	250	327	336	453	573
	D	22	22	25	34	36	32
	E	20	20	20	26	28	24
Weight (Kg)		0.55	0.6	0.78	0.78	1.13	1.75

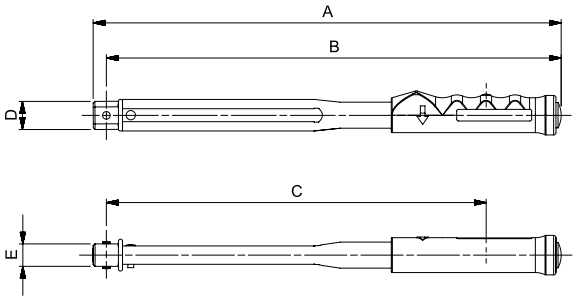

PROFESSIONAL TORQUE WRENCHES MODELS 650 - 1500 ADJUSTABLE & 'P' TYPE

For precision applications to 1500 N·m

- Exceptionally clear torque signal from unique mechanism
- Non length dependant so can be used with or without the supplied extension handle (optional on Model 650)
- Extension handle significantly reduces operator effort to achieve high torque values
- Accurate to ±3% of reading which meets the requirements of ISO6789-2:2017

2	ADJUSTABLE RATCHET - DUAL SCALE
14037	Pro 650, ¾", 130 - 650 N·m, 100 - 480 lbf·ft
14015	Pro 800, ¾", 200 - 800 N·m, 150 - 600 lbf·ft
14016	Pro 800, 1", 200 - 800 N·m, 150 - 600 lbf·ft
14002	Pro 1000, ¾", 300 - 1000 N·m, 220 - 750 lbf·ft
14003	Pro 1000, 1", 300 - 1000 N·m, 220 - 750 lbf·ft
14004	Pro 1500, ¾", 500 - 1500 N·m, 370 - 1100 lbf·ft
14005	Pro 1500, 1", 500 - 1500 N·m, 370 - 1100 lbf·ft

2	ADJUSTABLE RATCHET - N·m ONLY
14038	Pro 650, ¾", 130 - 650 N·m
14024	Pro 800, ¾", 200 - 800 N·m
14025	Pro 800, 1", 200 - 800 N·m
14026	Pro 1000, ¾", 300 - 1000 N·m
14027	Pro 1000, 1", 300 - 1000 N·m
14028	Pro 1500, ¾", 500 - 1500 N·m
14029	Pro 1500, 1", 500 - 1500 N·m

2	ADJUSTABLE RATCHET - lbf·ft ONLY
14044	Pro 650, ¾", 100 - 480 lbf·ft
14045	Pro 800, ¾", 150 - 600 lbf·ft
14046	Pro 800, 1", 150 - 600 lbf·ft
14047	Pro 1000, ¾", 220 - 750 lbf·ft
14048	Pro 1000, 1", 220 - 750 lbf·ft
14049	Pro 1500, ¾", 370 - 1100 lbf·ft
14050	Pro 1500, 1", 370 - 1100 lbf·ft

2	TORQUE HANDLE ADJUSTABLE - DUAL SCALE
14040	Pro 650, 22mm spigot, 130 - 650 N·m, 100 - 480 lbf·ft

2	FEMALE TORQUE HANDLE ADJUSTABLE - DUAL SCALE
14041	Pro 650, 14 x 18mm, 130 - 650 N·m, 100 - 480 lbf·ft

2	RATCHET PRODUCTION 'P' TYPE (Must be set using a Torque Tester, see pages 76 - 83)
14039	Pro 650, ¾", 130 - 650 N·m, 100 - 480 lbf·ft
14017	Pro 800, ¾", 200 - 800 N·m, 150 - 600 lbf·ft
14018	Pro 800, 1", 200 - 800 N·m, 150 - 600 lbf·ft
14007	Pro 1000, ¾", 300 - 1000 N·m, 220 - 750 lbf·ft
14008	Pro 1000, 1", 300 - 1000 N·m, 220 - 750 lbf·ft
14009	Pro 1500, ¾", 500 - 1500 N·m, 370 - 1100 lbf·ft
14010	Pro 1500, 1", 500 - 1500 N·m, 370 - 1100 lbf·ft
SQ2222	Pre-set, etch and certify (Allow 3 days delivery for this service)

8	MODELS 650-1500 ACCESSORY
14142	Extension Handle (included with 800-1500 Models as standard)

2	TORQUE HANDLE PRODUCTION 'P' TYPE (Must be set using a Torque Tester, see pages 76 - 83)
14042	Pro 650, 22mm spigot, 130 - 650 N·m, 100 - 480 lbf·ft
SQ2222	Pre-set, etch and certify (Allow 3 days delivery for this service)

2	FEMALE TORQUE HANDLE PRODUCTION 'P' TYPE (Must be set using a Torque Tester, see pages 76 - 83)
14043	Pro 650, 14 x 18mm, 130 - 650 N·m, 100 - 480 lbf·ft
SQ2222	Pre-set, etch and certify (Allow 3 days delivery for this service)

All models supplied in carry case

PROFESSIONAL TORQUE WRENCHES MODELS 650 - 1500 ADJUSTABLE AND 'P' TYPE

Push-Through Ratchet

Model		Pro 650	Pro 800 ¾"	Pro 800 1"	Pro 1000 ¾"	Pro 1000 1"	Pro 1500 ¾"	Pro 1500 1"	Pro 650	Pro 800 ¾" 'P' Type	Pro 800 1" 'P' Type	Pro 1000 ¾" 'P' Type	Pro 1000 1" 'P' Type	Pro 1500 ¾" 'P' Type	Pro 1500 1" 'P' Type
Part Number/s		14037 14038 14044	14015 14024 14045	14016 14025 14046	14002 14026 14047	14003 14027 14048	14004 14028 14049	14005 14029 14050	14039	14017	14018	14007	14008	14009	14010
Dimensions (mm)	A	856	1037	1037	1245	1245	1571	1571	848	1030	1030	1238	1238	1563	1563
	B	823	999	999	1208	1208	1533	1533	816	992	992	1201	1201	1526	1526
	C	713	889	889	1097	1097	1423	1422	713	889	889	1097	1097	1424	1423
	ØD	66	75	75	75	75	75	75	66	75	75	75	75	75	75
	E	56	58	66	58	66	58	66	55	58	66	58	58	58	66
	F	30	33	33	38	38	38	38	35	38	38	38	38	38	38
Weight (Kg)		4	5.2	5.2	5.8	5.8	6.7	6.7	4	5.2	5.2	5.7	5.7	6.7	6.7

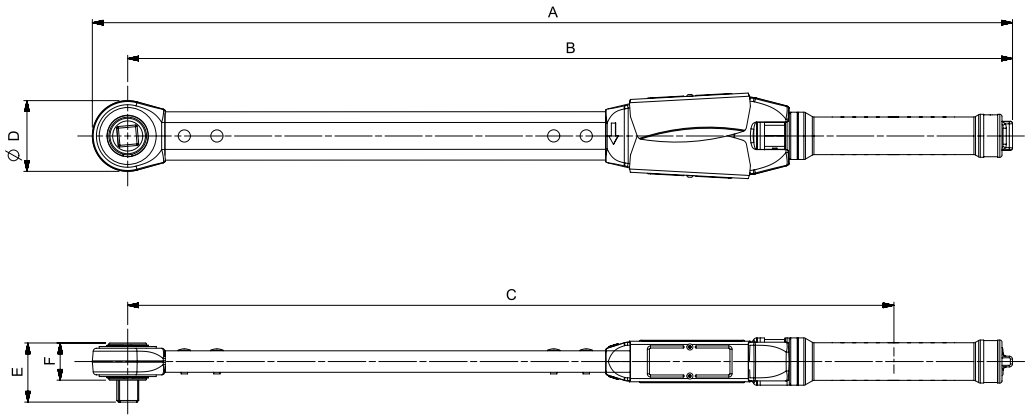

Spigot Torque Handle

Model		Pro 650	Pro 650 'P' Type
Part Number/s		14040	14042
Dimensions (mm)	A	807	800
	B	799	792
	C	688	689
	ØD	22	22
	E	45	45
Weight (Kg)		3.6	3.6

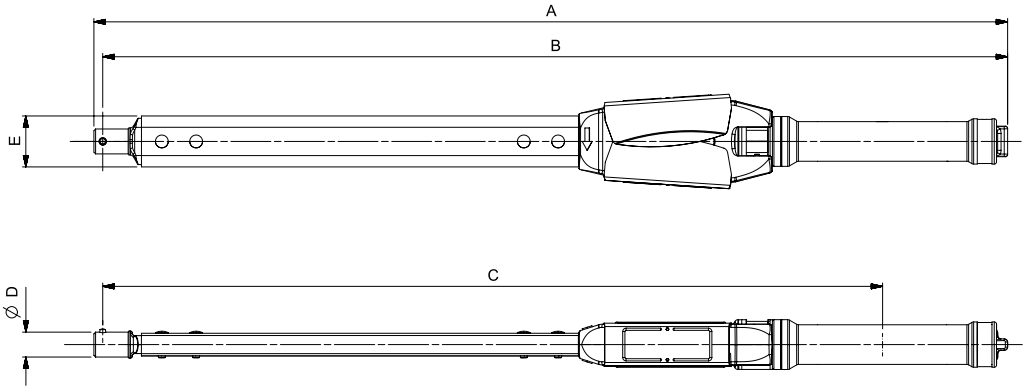

Female Torque Handle

Model		Pro 650	Pro 650 'P' Type
Part Number/s		14041	14043
Dimensions (mm)	A	830	823
	B	815	808
	C	704	705
	D	30	30
	E	45	45
	F	23	23
Weight (Kg)		3.6	3.6

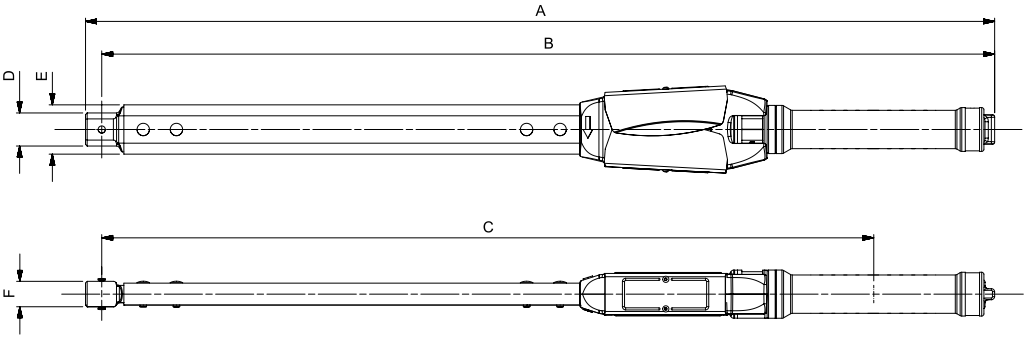

NOTE: When using a 14142 Extension Handle add 495mm to dimensions 'A' and 'B', add 515mm to dimension C and add 1.6 Kg to the weight.

INDUSTRIAL 2R AND 2AR

Easy to read scale

A re-engineered, robust, easy to use industrial torque wrench. Ideal for light commercial vehicle maintenance.

- Unique profiled cam and reaction plate- gives much clearer 'torque break point' reducing the possibility of over torqueing
- Robust construction gives accurate results, to ±4%, even in arduous working conditions meeting the requirements of ISO 6789-1:2017
- Easy to read scale is shielded from dust, dirt and spray
- Integral pull-out adjustment bar - no additional torque setting tool required
- Push-through ratchet allows two direction torqueing
- Provided with sturdy, padded fabric carry case with shoulder strap
- Easily replaceable ratchet - held in place with pin and clip
- New handle – more comfortable and guides operator's hand to correct position
- Tethering point allows the wrench to be attached to a harness

2	RATCHET ADJUSTABLE - DUAL SCALE
12110	2R, ½", 70 - 270 N·m, 50 - 200 lbf·ft
12111	2AR, ½", 80 - 340 N·m, 60 - 250 lbf·ft

2	RATCHET ADJUSTABLE - lbf·ft ONLY
12112	2R, ½", 50 - 200 lbf·ft

Model		2R	2AR
Part Number/s		12110 12112	12111
Dimensions (mm)	A	690	784
	B	629	724
	C	548	643
	ØD	52	52
	E	89	89
	F	304	304
	G	45	45
	H	28	28
Weight (Kg)		2.65	3.00

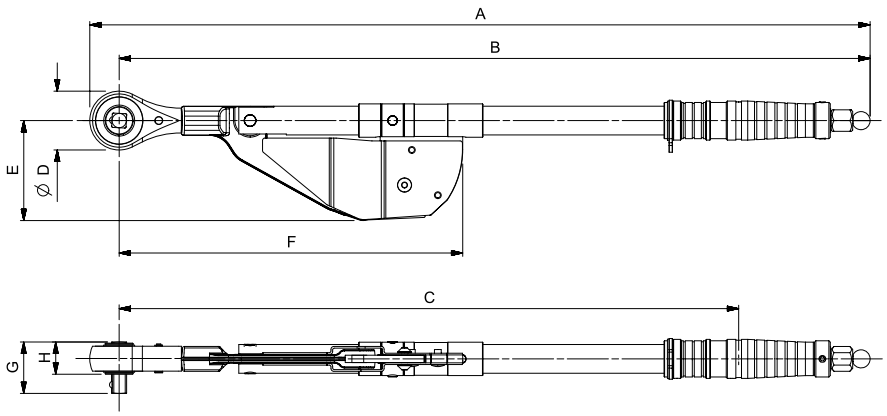

INDUSTRIAL TORQUE WRENCHES ADJUSTABLE AND 'P' TYPE

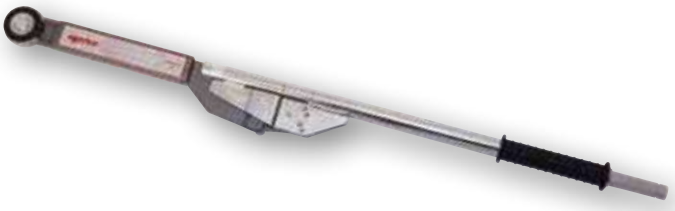

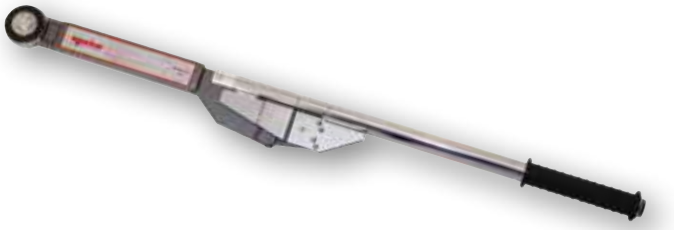

For ultimate torque control in heavy duty applications

- Unique 'break action' mechanism gives unparalleled control over the applied torque
- Perfect for wheel nuts and many other applications
- Accurate to ±4% of reading which meets the requirements of ISO 6789-1:2017
- Split versions available for when storage space is limited such as vehicle tool kits
- 2000 N·m 6R, see 'split' versions on page 28

2	RATCHET ADJUSTABLE - DUAL SCALE
12001	3AR, ¾", 100 - 500 N·m, 70 - 350 lbf·ft
12001.01	3AR, 1", 100 - 500 N·m, 70 - 350 lbf·ft
12006	4R, ¾", 150 - 700 N·m, 100 - 500 lbf·ft
12006.01	4R, 1", 150 - 700 N·m, 100 - 500 lbf·ft
12007	4AR, ¾", 200 - 800 N·m, 150 - 600 lbf·ft
12007.01	4AR, 1", 200 - 800 N·m, 150 - 600 lbf·ft
12009	5R, ¾", 300 - 1000 N·m, 200 - 750 lbf·ft
12009.01	5R, 1", 300 - 1000 N·m, 200 - 750 lbf·ft
12012	5AR, ¾", 700 - 1500 N·m, 500 - 1000 lbf·ft
12012.01	5AR, 1", 700 - 1500 N·m, 500 - 1000 lbf·ft

2	RATCHET ADJUSTABLE - N·m ONLY
12105	4AR, ¾", 200 - 800 N·m
12106	4AR, 1", 200 - 800 N·m
12107	5R, ¾", 300 - 1000 N·m
12108	5R, 1", 300 - 1000 N·m

2	TORQUE HANDLE ADJUSTABLE - DUAL SCALE
12003*	No.4, 22mm spigot, 130 - 550 N·m, 100 - 400 lbf·ft

*Carry case not included

Production 'P' type versions are designed to discourage unauthorised alteration. They have no scale and so must be set against a torque testing device such as Norbar's TruCheck™ - see page 79.

- Unique 'break action' mechanism gives unparalleled control over the applied torque
- Perfect for wheel nuts and many other applications
- Accurate to ±4% of reading

2	RATCHET PRODUCTION 'P' TYPE (Must be set using a Torque Tester, see pages 76 - 83)
12015	3AR, ¾", 100 - 500 N·m, 70 - 350 lbf·ft
12020	4R, ¾", 150 - 700 N·m, 100 - 500 lbf·ft
12023	5R, ¾", 300 - 1000 N·m, 200 - 750 lbf·ft
12002	5AR, ¾", 700 - 1500 N·m, 500 - 1000 lbf·ft
SQ2222	Pre-set, etch and certify (Allow 3 days delivery for this service)

2	TORQUE HANDLE 'P' TYPE (Must be set using a Torque Tester, see pages 76 - 83)
12017*	No.4, P Type, 22mm spigot, 130 - 550 N·m, 100 - 400 lbf·ft
SQ2222	Pre-set, etch and certify (Allow 3 days delivery for this service)

*Carry case not included

INDUSTRIAL TORQUE WRENCHES ADJUSTABLE AND 'P' TYPE

Industrial Push-Through Ratchets / Split / Bi-Square

Model		3AR	3AR 'P' Type	4R	4R 'P' Type	4R Split	4AR	5R	5R 'P' Type	5R Split	5AR	5AR 'P' Type	6R Split	Bi-Square
Part Number/s		12001 12001.01	12015	12006 12006.01	12020	12102 12102.01	12007 12007.01 12105 12106	12009 12009.01 12107 12108	12023	12101 12101.01	12012 12012.01	12002	12100	12026
Ratchet teeth		36	36	36	36	36	36	36	36	36	36	36	36	N/A
Dimensions (mm)	A	808	811	1049	1052	1049	1149	1382	1385	1382	1382	1385	1802	1351
	B	773	777	1014	1018	1015	1114	1347	1351	1348	1347	1351	1767	1313
	C	678	678	919	919	915	1019	1252	1252	1248	1267	1267	1687	1218
	ØD	69	69	69	69	69	69	69	69	69	69	69	69	76
	E	73	73	73	73	73	73	73	73	73	73	73	73	73
	F	337	337	578	578	578	678	911	911	911	911	911	1331	877
	G	¾" = 55 1" = 63	55	¾" = 55 1" = 63	55	¾" = 55 1" = 63	¾" = 55 1" = 63	¾" = 55 1" = 63	55	¾" = 55 1" = 63	¾" = 55 1" = 63	55	63	N/A
	H	35	35	35	35	35	35	35	35	35	35	35	35	N/A
	I max.	105	N/A	105	N/A	105	105	105	N/A	105	105	N/A	105	105
Weight (Kg)		5.2	5.2	6.3	6.3	6.3	6.4	7.3	7.3	7.3	10.4	10.4	13	7.1

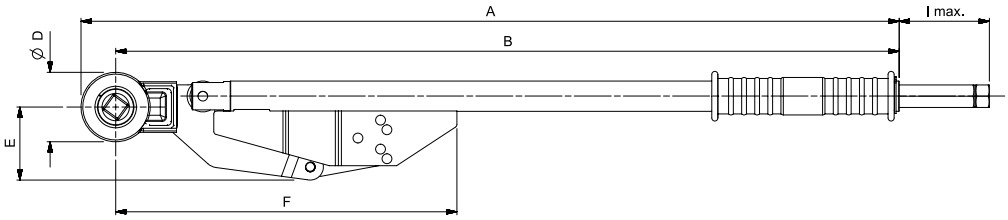

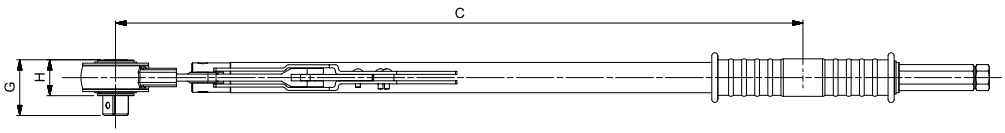

Spigot Torque Handle

Model		No.4	No.4 'P' Type
Part Number/s		12003	12017
Dimensions (mm)	A	833	837
	B	826	829
	C	731	731
	D	22	22
	E	73	73
	F	389	389
	G	N/A	N/A
	H	N/A	N/A
	I max.	105	N/A
Weight (Kg)		4.6	4.6

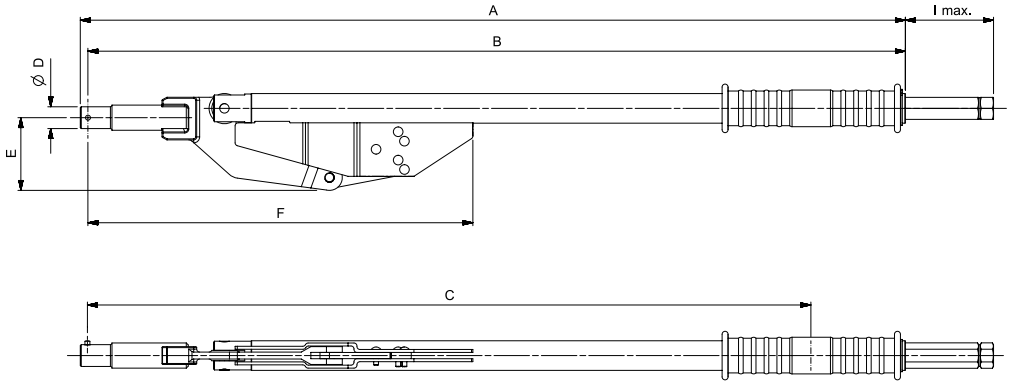

INDUSTRIAL TORQUE WRENCHES - SPLIT

Split Industrials are supplied in two parts for easier transportation and storage, but can be assembled and disassembled in seconds.

2	RATCHET SPLIT ADJUSTABLE - DUAL SCALE
12102	4R, ¾", 150 - 700 N·m, 100 - 500 lbf·ft
12102.01	4R, 1", 150 - 700 N·m, 100 - 500 lbf·ft
12101	5R, ¾", 300 - 1000 N·m, 200 - 750 lbf·ft
12101.01	5R, 1", 300 - 1000 N·m, 200 - 750 lbf·ft
12100	6R, 1", 900 - 2000 N·m, 700 - 1500 lbf·ft

INDUSTRIAL TORQUE WRENCH - BI-SQUARE

The 1 11/16" Bi-square version of the Industrial Torque Wrench was developed specifically with rail track maintenance in mind. The critical need of the rail industry is to reduce the chance of any object being left on the track. Fitting directly onto rail fishplate bolts means that no socket or square drive is required, two components that could potentially be separated from the regular version of the Industrial Torque Wrench.

Other versions of this tool available on request.

2	BI-SQUARE - DUAL SCALE
12026	1 11/16" Bi-Square, 300 - 1000 N·m, 200 - 750 lbf·ft

ELECTRODE WRENCHES

For torque tightening of carbon electrodes.

Standard torque settings are shown. Other settings are available. The 8" diameter electrode wrench uses the professional torque handle as the control mechanism. Above 8" the Industrial wrench is used as the control mechanism.

9	LOW RANGE
12506	8" (200mm) 312 N·m
12530	10" (250mm) 542 N·m
12531	12" (300mm) 780 N·m

Other models available on request.

9	HIGH RANGE
12532	14" (350mm) 1140 N·m
12533	16" (400mm) 1300 N·m
12535	18" (450mm) 1500 N·m
12536	20" (500mm) 2000 N·m
12537	22" (550mm) 2370 N·m
12538	24" (600mm) 2370 N·m
12538.HD	24" (600mm) 3200 N·m

CLICKTRONIC®

A first for our range of torque wrenches, ClickTronic® combines the accuracy, durability and comfort from the mechanism of the tried and tested Professional wrench with a new dynamic, easy to use, digital readout all packaged in a sleek, aesthetically appealing product.

- Accurate to ±3% of reading which meets the requirements of ISO6789-2:2017
- OLED display provides a clear and easy to read display, which helps to significantly reduce setting errors
- Multiple torque units selectable by operator
- The lock is a push/pull type. It is faster and more intuitive to use. A coloured band on the lock clearly shows that the wrench is unlocked
- Utilises a rechargeable lithium battery which is charged using a mini USB lead
- Square drive adaptors are provided with the 50 N·m and 100 N·m Industrial Ratchet models

Timestrip® Feature

Torque wrenches should be calibrated once a year as a minimum, more frequently in harsh environments and with high levels of usage. Norbar's Timestrip® gives a visual indication that the wrench is due for re-calibration and has 3, 6, 9 and 12 month graduations. (Timestrip® is a registered trademark of Timestrip UK Ltd).

Lock Adjustment Knob

Mini USB

Timestrip®

Digital Scale

Automotive Ratchet

These compact ratchets allow rapid direction change enabling you to, for example, back off a nut that you have tightened. Torque control is in the clockwise direction only.

2	AUTOMOTIVE RATCHET (Reversible)
15152	ClickTronic® 50, ⅜", 10 - 50 N·m
15153	ClickTronic® 50, ½", 10 - 50 N·m
15154	ClickTronic® 100, ⅜", 20 - 100 N·m
15155	ClickTronic® 100, ½", 20 - 100 N·m
15156	ClickTronic® 200, ½", 40 - 200 N·m

Industrial Ratchet

The square drive of these robust ratchets can be removed and replaced in the other side of the ratchet head so that the wrench will give torque control in both the clockwise and anti-clockwise directions.

2	INDUSTRIAL RATCHET ('Mushroom' head)
15166⁺	ClickTronic® 50, ⅜", 10 - 50 N·m
15167⁻	ClickTronic® 100, ½", 20 - 100 N·m
15168	ClickTronic® 200, ½", 40 - 200 N·m
15157	ClickTronic® 300, ½", 60 - 300 N·m
15158	ClickTronic® 340, ½", 68 - 340 N·m

⁺ Supplied with ½" sq. dr. adaptor

⁻ Supplied with ⅜" sq. dr. adaptor

CLICKTRONIC®

Female Torque Handle

For many applications a spanner end fitting rather than a socket is the best or often, the only solution. Typically this will be because the joint is a pipe union (such as a brake pipe).

2	FEMALE TORQUE HANDLE
15192	ClickTronic® 50, 9 x 12mm, 10 - 50 N·m
15193	ClickTronic® 100, 9 x 12mm, 20 - 100 N·m
15194	ClickTronic® 200, 9 x 12mm, 40 - 200 N·m
15195	ClickTronic® 200, 14 x 18mm, 40 - 200 N·m
15196	ClickTronic® 300, 14 x 18mm, 60 - 300 N·m
15197	ClickTronic® 340, 14 x 18mm, 68 - 340 N·m

Female Torque Handle

Model		ClickTronic® 50 9 x 12mm	ClickTronic® 100 9 x 12mm	ClickTronic® 200 9 x 12mm	ClickTronic® 200 14 x 18mm	ClickTronic® 300 14 x 18mm	ClickTronic® 340 14 x 18mm
Part Number/s		15192	15193	15194	15195	15196	15197
Dimensions (mm)	A	330	371	450	457	575	666
	B	319	359	436	443	561	653
	C	223	264	341	349	465	557
	D	22	22	24	33	36	33
	E	20	20	19	25	28	25
Weight (Kg)		0.7	0.8	0.9	1.0	1.2	1.3

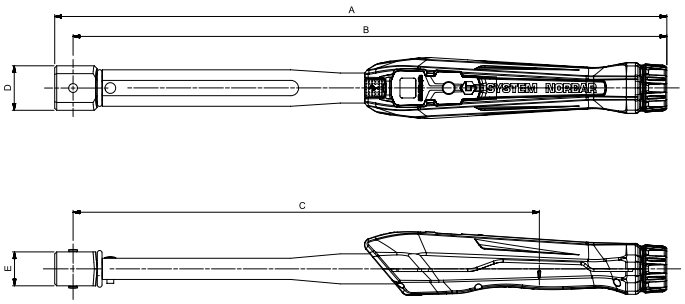

Industrial Ratchet

Model		ClickTronic® 50 ⅜"	ClickTronic® 100 ½"	ClickTronic® 200 ½"	ClickTronic® 300 ½"	ClickTronic® 340 ½"
Part Number/s		15166	15167	15168	15157	15158
Dimensions (mm)	A	340	392	474	598	690
	B	322	370	452	572	664
	C	228	275	357	478	569
	ØD	35	45	45	52	52
	E	37	38	48	48	48
	F	26	32	32	33	33
Weight (Kg)		0.8	1.0	1.1	1.5	1.6

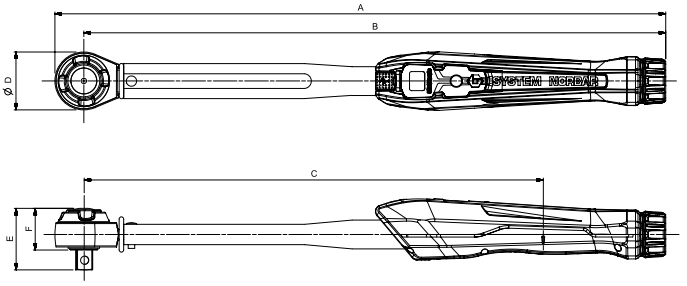

Automotive Ratchet

Model		ClickTronic® 50 ⅜"	ClickTronic® 50 ½"	ClickTronic® 100 ⅜"	ClickTronic® 100 ½"	ClickTronic® 200 ½"
Part Number/s		15152	15153	15154	15155	15156
Dimensions (mm)	A	333	347	373	373	469
	B	318	318	358	358	449
	C	223	223	263	263	354
	ØD	30	30	30	30	42
	E	33	38	33	38	46
	F	22	22	22	22	30
Weight (Kg)		0.8	0.8	0.8	0.8	1.1

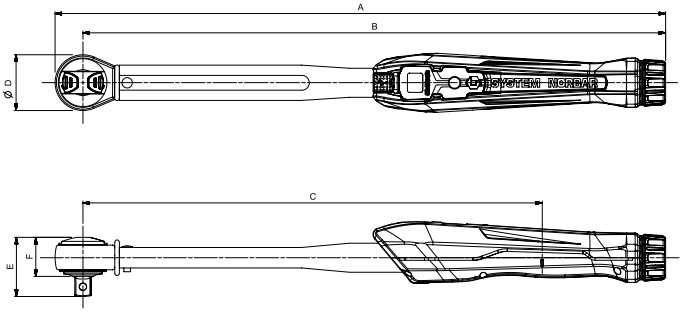

NORTRONIC® ELECTRONIC TORQUE WRENCHES

The NorTronic®, our first electronic torque wrench, sets the benchmark with its unique Torque Data System (TDS) software and combination of accuracy, wireless capability and angle measurement, in a versatile, robust and easy to use package.

- Accurate and traceable torque and angle control
- Two full colour OLED displays positioned at 90° to each other for visual indication both horizontally and vertically
- 3 Models covering 5 N·m- 330 N·m
- IP44 protection against dust and water ingress
- One piece aluminium handle
- Extruded aluminium case
- Torque & Angle readings can be sent to TDS in real time or downloaded via the USB lead or wireless interface. For a wireless connection, a wireless adaptor is required for your PC. Each wireless adaptor can handle up to 8 wrenches
- Ability to interface to ProSuite process control software
- Calibration date of tool can be displayed via TDS or third party software
- ASCII mode allows for interfacing the Tool to third party software
- When used with a HandTorque® gearbox the NorTronic can directly display, save and send the output Torque of the HandTorque®
- Ability to set a Torque, Angle and Final Torque Target
- Ability to produce and save Torque & Angle graphs (in real time) from a USB connected tool
- Ability to have up to 15 linked or non-linked Targets on the tool at any one time
- Angle calibration in accordance with VDI/VDE 2648
- UKAS accredited Torque calibration in both clockwise and anti-clockwise direction

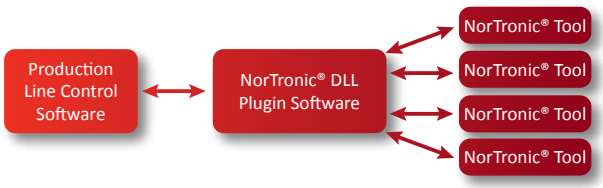

NorTronic® DLL (Dynaminc Link Library) Plugin enables NorTronic® tools to be interfaced to a customer's existing production line control software.

Contact Norbar for more details.

Compatible with Norbar's huge range of spanner end fittings

Unique Torque Data System software enables data management and archiving to a PC

NORTRONIC® ELECTRONIC TORQUE WRENCHES

4	NORTRONIC® 868 MHZ
43500	NorTronic® 50, ⅜" sq. dr., 868 MHz, 5 - 50 N·m
43501	NorTronic® 50, ½" sq. dr., 868 MHz, 5 - 50 N·m
43502	NorTronic® 200 ½" sq. dr., 868 MHz, 20 - 200 N·m
43503	NorTronic® 330, ½" sq. dr., 868 MHz, 33 - 330 N·m
43508	USB Wireless Adaptor, 868 MHz

For UK, Europe, Singapore and India

4	NORTRONIC® 915 MHZ
43504	NorTronic® 50, ⅜" sq. dr., 915 MHz, 5 - 50 N·m
43505	NorTronic® 50, ½" sq. dr., 915 MHz, 5 - 50 N·m
43506	NorTronic® 200, ½" sq. dr., 915 MHz, 20 - 200 N·m
43507	NorTronic® 330, ½" sq. dr., 915 MHz, 33 - 330 N·m
43509	USB Wireless Adaptor, 915 MHz

For USA, Canada, Australia and New Zealand

Model		NorTronic® 50 ⅜"	NorTronic® 50 ½"	NorTronic® 200 ½"	NorTronic® 330 ½"
Part Number/s		43500 43504	43501 43505	43502 43506	43503 43507
Dimensions (mm)	A	468	472	592	808
	B	449	449	569	782
	C	34	45	45	45
	D	41	41	41	41
	E	223	223	223	223
	F	35	35	35	35
	G	388	388	508	721
	ØH	38	46	46	52
	I	42	42	42	42
Weight (Kg)		1.20	1.20	1.45	1.86

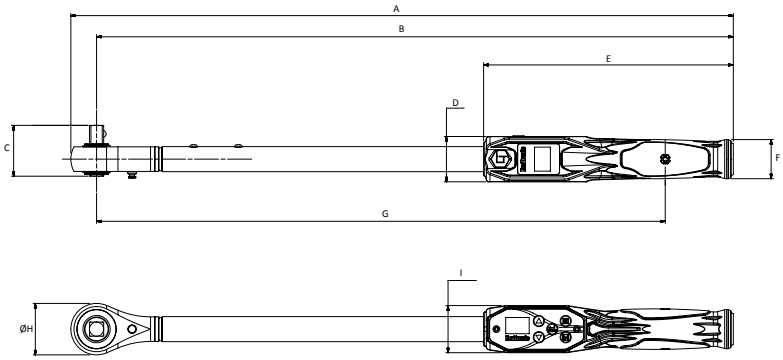

INSULATED TORQUE WRENCH

Using injection moulded Nylon 11, Norbar's insulated torque wrench complies with IEC 60900:2004 and is more durable than the traditional PVC dipped insulated tools. Certified to 1000 volts.

4	ADJUSTABLE - DUAL SCALE
13870	TT60 ⅜" Insulated 12 - 60 N·m, 8 - 44 lbf·ft
13871	TT60 ½" Insulated 12 - 60 N·m, 8 - 44 lbf·ft

Model		All Models
Part Number/s		13870 13871
Dimensions (mm)	A	350
	B	328
	C	234
	ØD	44
	E	80
	F	65
Weight (Kg)		0.9

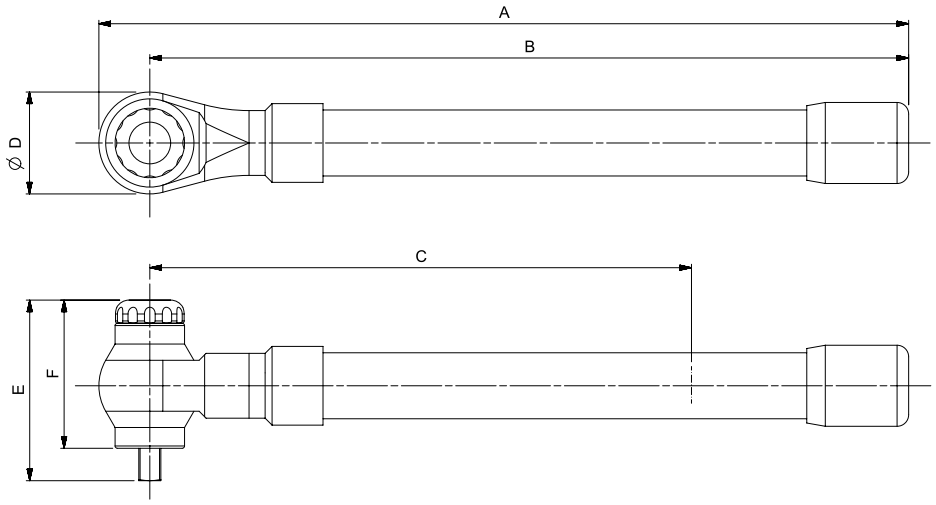

SPANNER END FITTINGS FOR NORBAR 16mm TORQUE HANDLES

On this page you will find our standard range of end fittings.
For other sizes, see page 35 & 36.

2	OPEN ENDS METRIC
29841	7mm
29842	8mm
29843	9mm
29844	10mm
29845	11mm
29846	12mm
29847	13mm
29848	14mm
29849	15mm
29850	16mm
29851	17mm
29876	18mm
29877	19mm
29852	20mm
29853	21mm
29854	22mm
29855	23mm
29856	24mm
29857	25mm
29858	26mm
29878	27mm
29860	29mm
29861	30mm
29863	32mm

2	OPEN ENDS IMPERIAL
29701	¼"
29702	5/16"
29703	⅜"
29704	7/16"
29705	½"
29706	9/16"
29707	⅝"
29708	11/16"
29709	¾"
29710	13/16"
29711	⅞"
29712	15/16"
29713	1"
29714	1 1/16"
29715	1 ⅛"
29716	1 3/16"
29717	1 ¼"
29718	1 5/16"

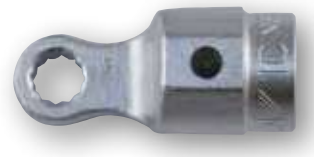

2	RING ENDS METRIC
29881	7mm
29882	8mm
29883	9mm
29884	10mm
29885	11mm
29886	12mm
29887	13mm
29888	14mm
29889	15mm
29890	16mm
29891	17mm
29913	18mm
29914	19mm
29892	20mm
29893	21mm
29894	22mm
29895	23mm
29896	24mm
29915	27mm

2	RING ENDS IMPERIAL
29726	¼"
29727	5/16"
29728	⅜"
29729	7/16"
29730	½"
29731	9/16"
29732	⅝"
29733	11/16"
29734	¾"
29735	13/16"
29736	⅞"
29737	15/16"
29738	1"
29739	1 1/16"

2	FLARE ENDS METRIC
29921	7mm
29922	8mm
29923	9mm
29924	10mm
29925	11mm
29926	12mm
29927	13mm
29928	14mm
29929	15mm
29930	16mm
29931	17mm
29953	18mm
29954	19mm
29932	20mm
29933	21mm
29934	22mm
29935	23mm
29936	24mm
29955	27mm

SPANNER END FITTINGS FOR NORBAR 22mm TORQUE HANDLES

On this page you will find our standard range of end fittings.
For other sizes, see page 35 & 36.

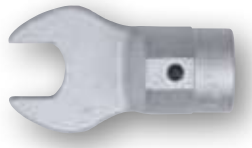

2	OPEN ENDS METRIC
29963.22	22mm Open End
29963.24	24mm Open End
29963.27	27mm Open End
29963.30	30mm Open End
29963.32	32mm Open End
29963.36	36mm Open End
29963.41	41mm Open End
29963.46	46mm Open End

2	RING ENDS METRIC
29960.22	22mm Ring End
29960.24	24mm Ring End
29960.27	27mm Ring End
29960.30	30mm Ring End
29960.32	32mm Ring End
29960.36	36mm Ring End
29960.41	41mm Ring End
29960.46	46mm Ring End

SPIGOT ACCESSORIES

2	16mm SPIGOT ACCESSORIES
44509	⅜" Ratchet with Push-through square
29825	½" Ratchet with Push-through square
29828	⅜" Fixed Square Drive
29827	½" Fixed Square Drive
29829	⅜" Reversible Ratchet Head
29830	½" Reversible Ratchet Head
29832	Blank End Fitting
85242	Blank End Fitting for Open End
11343	Blank End Fitting for Ring End
72000	Spigot Adaptor 16mm female to 22mm male

2	22mm SPIGOT ACCESSORIES
29969	¾" Square Drive Fixed Head
29972	¾" Ratchet with Push-through square
85719	Blank End Fitting for Open End
85720	Blank End Fitting for Ring End

LARGE SPANNER END FITTINGS FOR NORBAR 16mm TORQUE HANDLES UP TO 300 N·m

See below for explanation of Part Numbers. Other sizes available on request.

2	OPEN OFFSET METRIC 16mm
29200.Mxx	28 - 42 mm
29200.Mxx	43 - 54 mm
29200.Mxx	55 - 70 mm

2	OPEN OFFSET IMPERIAL 16mm
29200.Ixx	1 ⅛" - 1 ⅝"
29200.Ixx	1 $^{11}/_{16}$" - 2 ⅛"
29200.Ixx	2 $^{3}/_{16}$" - 2 ¾"

2	FLARE OFFSET METRIC 16mm
29204.Mxx	25 - 39 mm
29204.Mxx	40 - 49 mm
29204.Mxx	50 - 70 mm

2	FLARE OFFSET IMPERIAL 16mm
29204.Ixx	1" - 1 ½"
29204.Ixx	1 $^{9}/_{16}$" - 1 $^{15}/_{16}$"
29204.Ixx	2" - 2 ¾"

2	RING OFFSET METRIC 16mm
29202.Mxx	25 - 39 mm
29202.Mxx	40 - 49 mm
29202.Mxx	50 - 70 mm

2	RING OFFSET IMPERIAL 16mm
29202.Ixx	1" - 1 ½"
29202.Ixx	1 $^{9}/_{16}$" - 1 $^{15}/_{16}$"
29202.Ixx	2" - 2 ¾"

2	OPEN INLINE METRIC 16mm
29201.Mxx	25 - 42 mm
29201.Mxx	43 - 54 mm
29201.Mxx	55 - 70 mm

2	OPEN INLINE IMPERIAL 16mm
29201.Ixx	1 ⅛" - 1 ⅝"
29201.Ixx	1 $^{11}/_{16}$" - 2 ⅛"
29201.Ixx	2 $^{3}/_{16}$" - 2 ¾"

2	RING INLINE METRIC 16mm
29203.Mxx	25 - 39 mm
29203.Mxx	40 - 51 mm
29203.Mxx	52 - 70 mm

2	RING INLINE IMPERIAL 16mm
29203.Ixx	1" - 1 ½"
29203.Ixx	1 $^{9}/_{16}$" - 2"
29203.Ixx	2 $^{1}/_{16}$" - 2 ¾"

2	FLARE INLINE METRIC 16mm
29205.Mxx	25 - 39 mm
29205.Mxx	40 - 51 mm
29205.Mxx	52 - 70 mm

2	FLARE INLINE IMPERIAL 16mm
29205.Ixx	1" - 1 ½"
29205.Ixx	1 $^{9}/_{16}$" - 2"
29205.Ixx	2 $^{1}/_{16}$" - 2 ¾"

METRIC

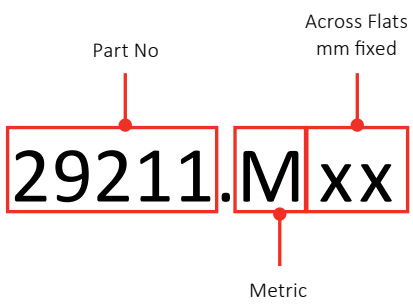

IMPERIAL

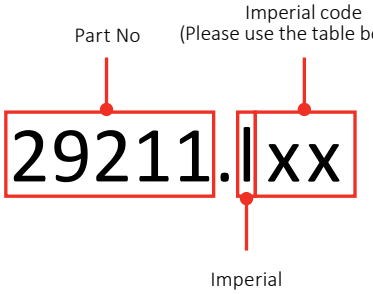

LARGE SPANNER END FITTINGS FOR NORBAR 22mm TORQUE HANDLES UP TO 650 N·m

See page 35 for explanation of Part Numbers. Other sizes available on request.

2	OPEN OFFSET METRIC 22mm	2	OPEN OFFSET IMPERIAL 22mm
29206.Mxx	28 - 55 mm	29206.Ixx	1 ⅛" - 2 ⅛"
29206.Mxx	56 - 88 mm	29206.Ixx	2 3/16" - 3 7/16"

2	FLARE OFFSET METRIC 22mm	2	FLARE OFFSET IMPERIAL 22mm
29210.Mxx	28 - 51 mm	29210.Ixx	1 ⅛" - 1 15/16"
29210.Mxx	52 - 88 mm	29210.Ixx	2" - 3 7/16"

2	RING OFFSET METRIC 22mm	2	RING OFFSET IMPERIAL 22mm
29208.Mxx	28 - 51 mm	29208.Ixx	1 ⅛" - 1 15/16"
29208.Mxx	52 - 88 mm	29208.Ixx	2" - 3 7/16"

2	OPEN INLINE METRIC 22mm	2	OPEN INLINE IMPERIAL 22mm
29207.Mxx	28 - 55 mm	29207.Ixx	1 ⅛" - 2 ⅛"
29207.Mxx	56 - 88 mm	29207.Ixx	2 3/16" - 3 7/16"

2	RING INLINE METRIC 22mm	2	RING INLINE IMPERIAL 22mm
29209.Mxx	28 - 44 mm	29209.Ixx	1 ⅛" - 1 ¾"
29209.Mxx	45 - 88 mm	29209.Ixx	1 13/16" - 3 7/16"

2	FLARE INLINE METRIC 22mm	2	FLARE INLINE IMPERIAL 22mm
29211.Mxx	28 - 44 mm	29211.Ixx	1 ⅛" - 1 ¾"
29211.Mxx	45 - 88 mm	29211.Ixx	1 13/16" - 3 7/16"

IMPERIAL A/F	CODE
5/16"	05
3/8"	06
7/16"	07
½"	08
9/16"	09
5/8"	10
11/16"	11
¾"	12
13/16"	13
7/8"	14
15/16"	15
1"	16
1 1/16"	17

IMPERIAL A/F	CODE
1 ⅛"	18
1 3/16"	19
1 ¼"	20
1 5/16"	21
1 ⅜"	22
1 7/16"	23
1 ½"	24
1 9/16"	25
1 5/8"	26
1 11/16"	27
1 ¾"	28
1 13/16"	29
1 7/8"	30

IMPERIAL A/F	CODE
1 15/16"	31
2"	32
2 1/16"	33
2 ⅛"	34
2 3/16"	35
2 ¼"	36
2 5/16"	37
2 ⅜"	38
2 7/16"	39
2 ½"	40
2 9/16"	41
2 5/8"	42
2 11/16"	43

IMPERIAL A/F	CODE
2 ¾"	44
2 13/16"	45
2 7/8"	46
2 15/16"	47
3"	48
3 1/16"	49
3 ⅛"	50
3 3/16"	51
3 ¼"	52
3 5/16"	53
3 ⅜"	54
3 7/16"	55

*Example: 1 ⅛" Open Inline for 22mm Spigot = 29207.I30

UKAS ACCREDITED CALIBRATION CERTIFICATION

Accredited Calibration Laboratory No. 0256

The hallmark of Norbar's high standard of workmanship is clearly seen in the fact that we were the first torque equipment manufacturer to have an in-house UKAS accredited calibration laboratory. We have no intention of resting on our laurels and take pride that we still provide the most comprehensive service available, ensuring we evolve to continue to meet your needs.

Norbar's laboratory has approval for torques between 0.005 N·m and 108,500 N·m and operates to BS EN ISO/IEC 17025:2005, which sets standards for the technical competence of the laboratory. This should not be confused with laboratories claiming ISO 9001 which relates only to a laboratory's quality management systems.

The part numbers shown below are for Comprehensive Calibration, for all new Torque Screwdrivers and Torque Wrenches, including NorTronic®, up to the maximum capacity shown.

Please see page 109 for Norbar's After Sale Service.

12	ONE DIRECTION
TWCC4.CW	Up to 400 N·m / 300 lbf·ft
TWCC5.CW	Up to 1000 N·m / 750 lbf·ft
TWCC6.CW	Up to 3000 N·m / 2200 lbf·ft

12	TWO DIRECTIONS
TWCC4.CW+CCW	Up to 400 N·m / 300 lbf·ft
TWCC5.CW+CCW	Up to 1000 N·m / 750 lbf·ft
TWCC6.CW+CCW	Up to 3000 N·m / 2200 lbf·ft

HANDTORQUE® TORQUE MULTIPLIERS

Torque wrench design offers just two solutions to the challenge of applying higher torques: either the load at the handle must be higher or the lever length must be greater. Clearly there are practical and safety limits to both of these solutions. For example, a Norbar Model 1000 (1000 N·m) torque wrench is 1.7m long with the extension handle fitted. As this is already quite long, how would one apply 2000 or 3000 N·m? Often there will not be the space to operate a torque wrench of sufficient length to comfortably apply such high torques and the chance that the wrench might slip off the nut increases as length increases.

Norbar's solution is to use a compact, epicyclic gearbox called a HandTorque® multiplier to accurately multiply the input torque provided by a torque wrench by a fixed ratio. This fixed ratio might be in the order of 5:1, 25:1 or even up to 125:1 for very high torque application. This means that a much smaller torque wrench can be used for a given torque application and the combined weight of the torque multiplier and torque wrench will often be lower than for a single large torque wrench. For example, one could apply 1000 N·m using a Norbar Model 1000 torque wrench weighing 5.8 kg or an HT-52/22.2 combined with a NorTorque® 60 with a total weight of just under 3 kg and a lever length of just 319mm.

The Norbar HandTorque® is the most comprehensive multiplier range available. Standard products are available up to 47,500 N·m (35,000 lbf·ft) and 'specials' to 300,000 N·m (220,000 lbf·ft). A range of 'nose extensions' for reaching difficult to access bolts and full range of torque transducers for highly accurate torque monitoring are available.

Torque Reaction	39
HandTorque Torque Multipliers	41
Anti Wind-Up Ratchets	43
HandTorque® HT3-1000	44
HandTorque® HT3 Series	44
HandTorque® HT4 Series	45
HandTorque® Compact Series	46
HandTorque® Compact Series Kits	47
HandTorque® Standard Series	47
HandTorque® Small Diameter Series	49

TORQUE REACTION

This page applies to both HandTorque® Multipliers and Powered Torque Tools

Principles of Torque Reaction

Newton's law dictates that for every applied force there is an equal and opposite reactive force. For applications requiring relatively low torques that can be applied with a torque wrench, this does not present a problem as the reactive force is absorbed by the operator. However, if the desired torque necessitates the use of a multiplier, the resultant reactive force can only be absorbed using an appropriate reaction device.

For this reason all Norbar multipliers are supplied with a reaction plate or reaction foot fitted as standard.

All of the standard reaction plates and feet supplied with standard Norbar tools have been designed to enable the multiplier's use in a variety of environments. However, due to an infinite number of bolting arrangements, it is impossible to have one reaction device that will satisfy every customer's requirement. See page 65 for when the reaction is not suitable.

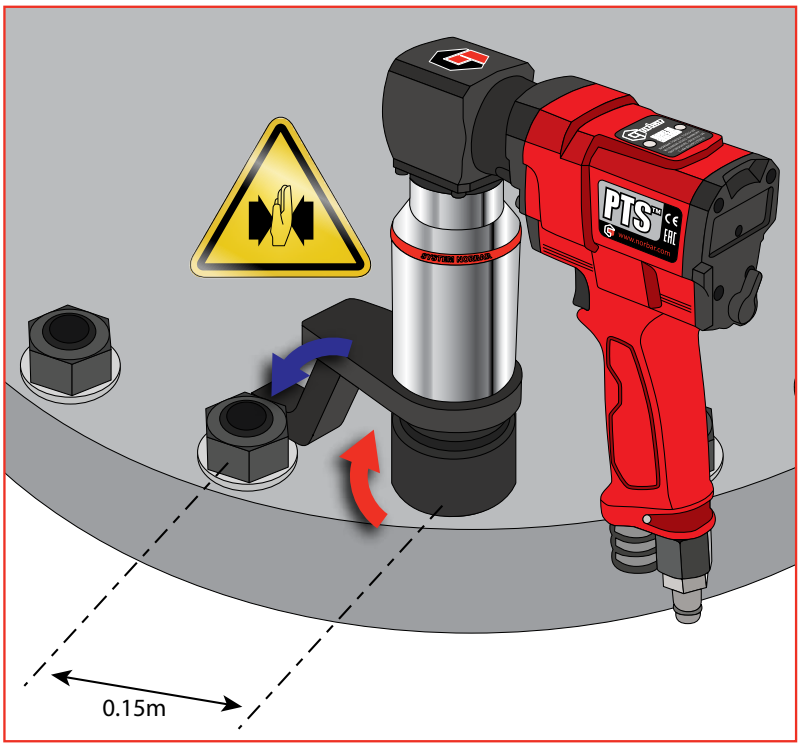

In the above example, 1,000 N·m torque output will result in a reactive force of 6,667 N at a point 0.15m from the axis of rotation or 2,000 N at 0.5m

Avoiding Torque Reaction Problems

It has already been mentioned that the reaction force is equal to the force being applied. However, the magnitude of the reaction force is dependent upon the perpendicular distance between the point of reaction and the centre line of the multiplier, ie. the greater the distance the lower the force.

For this reason the point of reaction should be kept as far away from the centre line of the gearbox as is practical.

Customers using or modifying reaction plates for Standard Series multipliers up to a capacity of 3400 N·m should note that if the reaction is taken on the radiused part, the reaction force is perpendicular to the tangent of the curve. Consequently, the further around the radius the reaction is taken, the smaller the perpendicular distance and therefore the greater the force.

Although a longer reaction plate may mean lower forces, the bending moment close to the multiplier will increase.

Customers extending the length of Norbar's standard reaction plates should be aware that an increase in overall length will result in a larger induced bending stress and should not assume that because the reaction plate is strong enough at one length it will remain so when extended.

Excessive side loading, resulting from poor reaction, increases frictional forces inside the multiplier. This can lead to lower multiplication ratios (outside ±4%).

The ideal reaction arrangement has the centre of the reaction bar and the centre of the nut on a perpendicular line to the centre line of the tool.

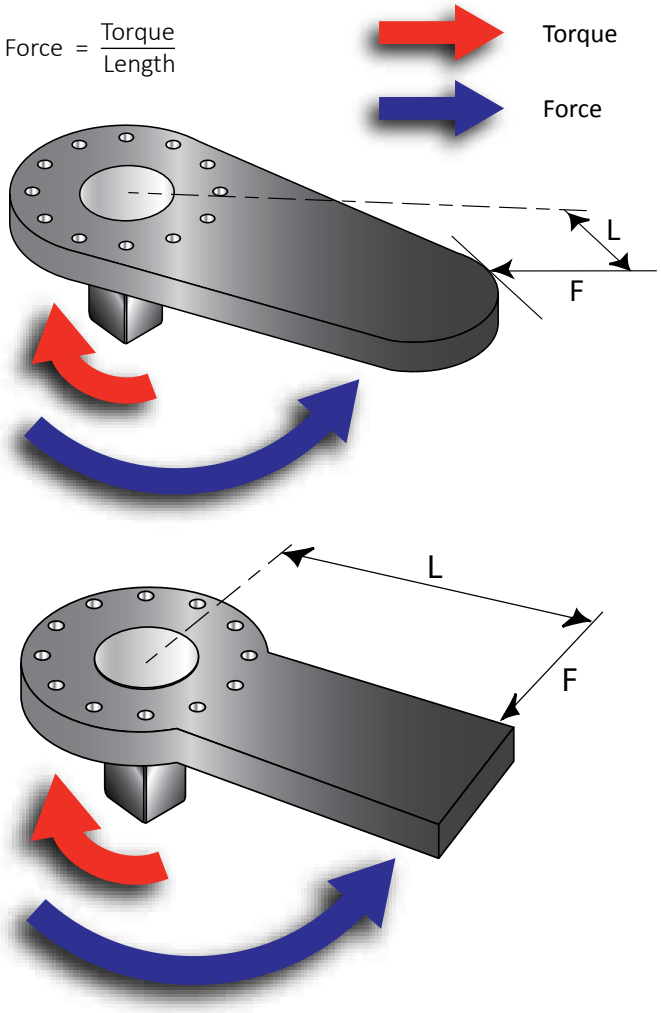

TORQUE REACTION

This page applies to both HandTorque® Multipliers and Powered Torque Tools

Red shading indicates ideal area for torque reaction to achieve multiplication factor better than ±4%.

It is not advised to react outside of the shaded area.

Signs of poor reaction are evident on this damaged foot. Reaction was taken at the wrong point on the foot and burring indicates that the foot was slipping off the reaction point.

Points to remember

- Take the reaction as far away from the multiplier as practical
- Ensure that the reaction point remains square to the multiplier wherever possible as this will minimise any additional stress in the output square, which could result in premature failure. If the multiplier tilts under load, the reaction may not be square
- For applications that do not allow the reaction to be taken securely it is advisable to use a double ended or balanced reaction plate

Reaction Force

When using Multipliers and PneuTorques the reaction point must be capable of withstanding the reaction force. Therefore, great care must be exercised where the reaction is taken when applying high torques to studs and bolts.

By using the following formula you can calculate the force at the point of reaction. The greater the distance the lower the force.

D = Stud Diameter

Formula to calculate Area of Stud $= \frac{\pi \times D^2}{4}$

Formula to calculate shear force: Shear Force $= \frac{\text{Reaction Force}}{\text{Area of Stud}}$

What to do if the standard reaction device is not suitable

For those applications that do not permit the use of a standard reaction plate the customer has three options.

- Norbar or an authorised Norbar distributor will design and manufacture a special purpose reaction plate to the customer's requirements
- The customer can modify the standard reaction plate to suit his requirements
- The customer can fabricate his own reaction device after liaison with Norbar's technical department or a Norbar distributor

Customers wishing to either modify the original reaction plate or fabricate their own device should read the above information on how to avoid common torque reaction problems.

HANDTORQUE® TORQUE MULTIPLIERS

What is a Torque Multiplier?

A torque multiplier is a device that increases the torque that can be applied by an operator. This is because the power output cannot exceed the power input, the number of output revolutions will be lower than the number of input revolutions (Torque x rpm = Power).

How HandTorque® Torque Multipliers Work

HandTorque® multipliers incorporate an 'epicyclic' or 'planetary' gear train having one or more stages. Each stage of gearing increases the torque applied by a factor of 5, allowing Norbar to offer multipliers typically in ratios of 5:1, 25:1 and 125:1.

In the planetary gear system, torque is applied to the input gear or 'sun' gear. Three or four planet gears whose teeth are engaged with the sun gear therefore rotate. The outside casing of the multiplier, or 'annulus' is also engaged with the planet gear teeth, and would normally rotate in the opposite direction to the sun gear. A reaction arm prevents the annulus from rotating, and this causes the planet gears to orbit around the sun. The planet gears are held in a 'planetary' carrier which also holds the output square drive, therefore as the planet gears orbit around the sun gear, the carrier and so the square drive turns. Without the reaction arm to keep the annulus stationary, the output square will not apply torque.

Why use a HandTorque® Torque Multiplier?

- **Safety** – use of long levers can be dangerous. Torque multipliers allow for a reduction in the lever length or operator effort by a factor of 5, 25 or 125
- **Space limitation** – the use of a long lever may be impossible due to the available space
- **Accuracy** – torque will be applied most accurately when it is applied smoothly and slowly. Torque multipliers enable this by removing much of the physical effort from the tightening task

Without a torque multiplier

With a torque multiplier

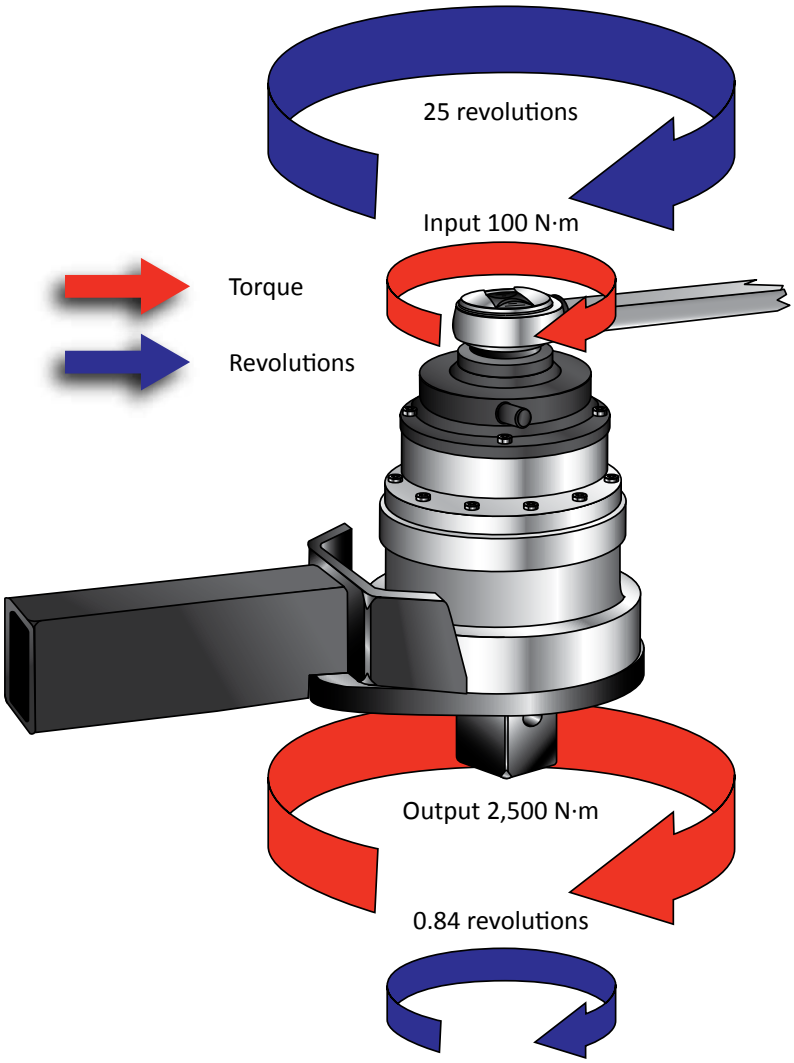

HANDTORQUE® TORQUE MULTIPLIERS

Advantages of the Norbar HandTorque® System

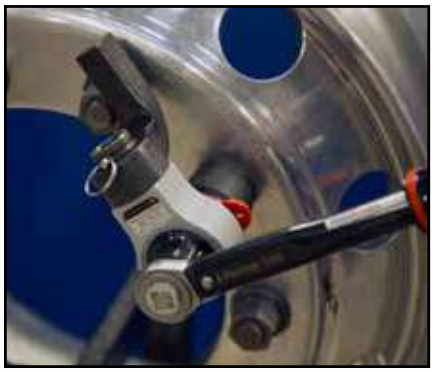

Norbar gearboxes are built to an extremely high standard of precision. All gears rotate on needle roller bearings about hardened and ground journal pins. As a result, Norbar HandTorques can be relied upon to have a torque multiplication accuracy of ±4% throughout the operating range, taking the uncertainty out of high torque tightening.

No gearbox is 100% efficient and so the velocity ratio (the number of turns that the input has to make to achieve one revolution of the output) is not the same as the torque multiplication ratio. Norbar multipliers are engineered such that each gear stage has a velocity ratio of typically 5.45:1 which results in a true torque multiplication factor of 5:1.

Torque output calculations are therefore a matter of simple arithmetic with little risk of incorrect bolt loading due to conversion errors. Other manufacturer's multipliers often require graphs or formulae to calculate the input torque to achieve a particular output.

The Norbar HandTorque® is the most comprehensive multiplier range available. Standard products are available up to 47,500 N·m (35,000 lbf·ft) and 'specials' to 300,000 N·m (220,000 lbf·ft). A range of 'nose extensions' for reaching difficult to access bolts and a full range of torque transducers for highly accurate torque monitoring are available.

Summary of Norbar torque multiplier advantages:

- The ratio stated is the true torque multiplication factor
- No correction charts are needed to determine torque output
- Strong, safe Anti Wind-Up Ratchet available on most models for safe and comfortable operation
- A wide range of alternative reaction styles are available making the HandTorque® adaptable to many applications
- Electronic torque transducers are available on most models for precise torque control

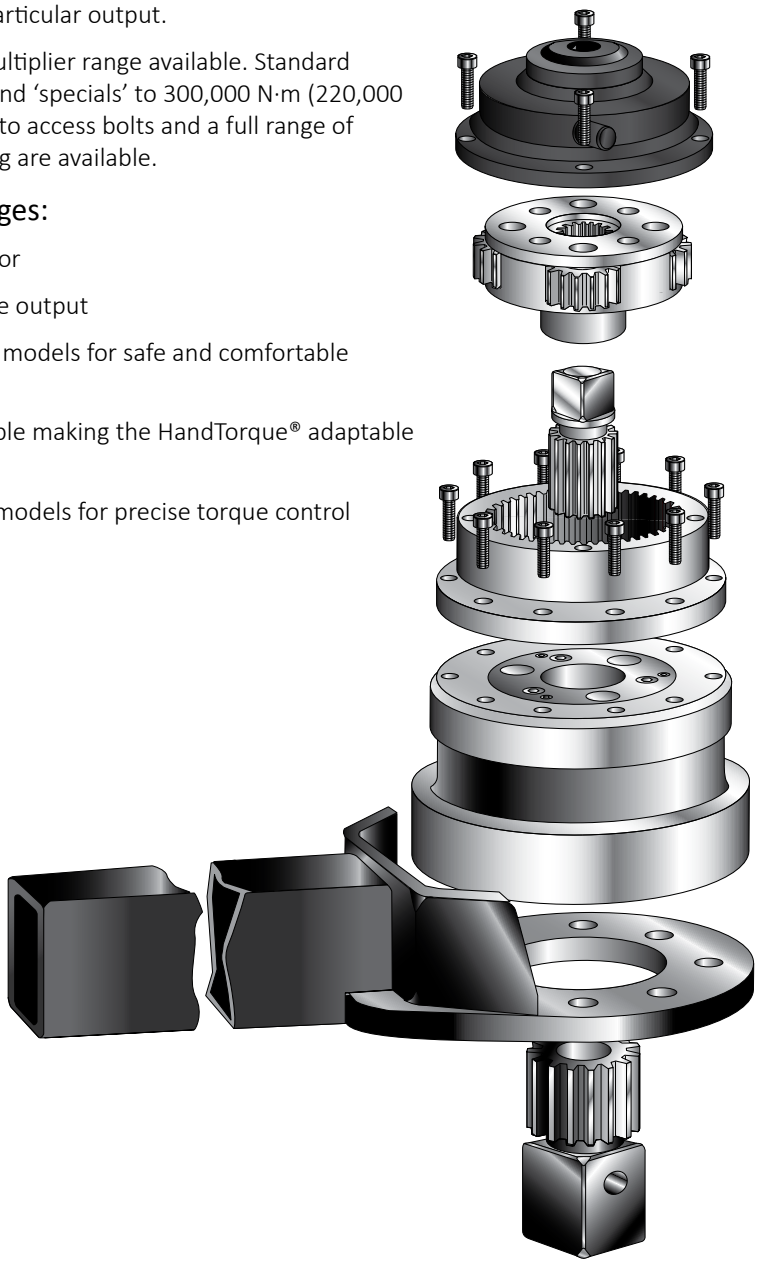

Norbar Anti Wind-Up Ratchets

Most multipliers with ratios of 25:1 and over are fitted with an anti wind-up ratchet. The multiplier can be thought of as a spring which must be fully wound before any tightening/untightening work can be applied to the bolt.

The AWUR ensures that the 'spring' stays wound and that any further torque input to the multiplier is applied directly to the bolt.

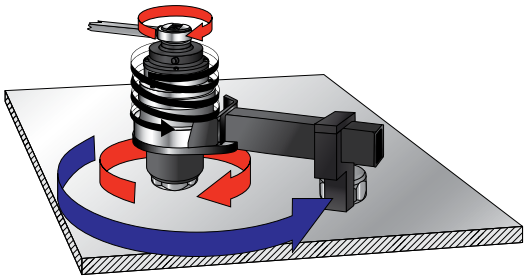

Multiplier behaves like a very stiff 'spring'

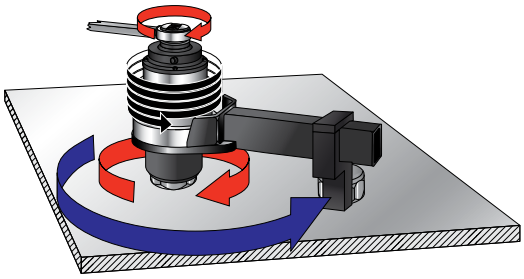

Multiplier will achieve maximum torque only after the 'spring' has been taken up

Torque → Reaction Force

AWUR benefits include:

1. The torque input device cannot fly backwards against the direction of operation if it is suddenly released.
2. Without an Anti Wind-Up Ratchet, it will often be necessary to continue to make 360° sweeps with the torque input device otherwise the multiplier will 'unwind'. However, obstructions will often make this impossible (as demonstrated in this example).

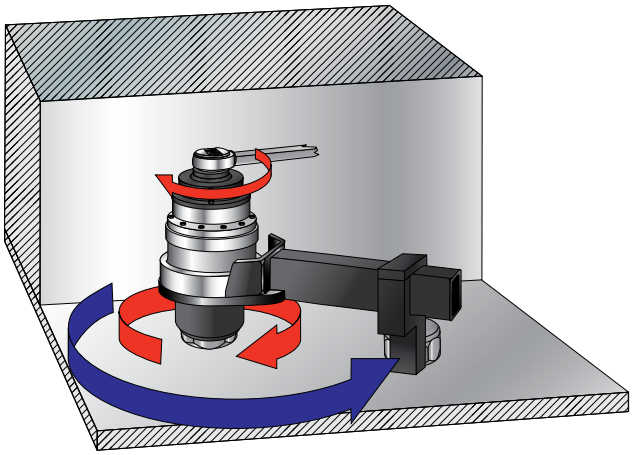

AWUR Set to anti-clockwise operation

AWUR Set to neutral

AWUR Set to clockwise operation

HANDTORQUE® HT3-1000

- 5:1 nominal torque multiplication reaction dependant. Ratio with cranked foot is 4.8:1; with straight reaction being 4.9:1
- ±4% torque multiplication accuracy
- Small and compact design
- Updated aesthetics with tough silver metallic powder coat
- Supplied with 2 reaction bar styles for maximum versatility
- Quick change cranked reaction with improved flexibility allowing reaction in 8 orientations
- Robust construction means minimal maintenance and long life
- If calibration is required, a UKAS accredited calibration certificate may be ordered (at extra cost)

2	HT3-1000
180260	HT3-1000 N·m Kit ½" input x ¾" output

HANDTORQUE® HT3 SERIES

- 5:1 torque multiplication, accuracy ±4%
- Supplied with two reaction bar styles for maximum versatility
- Robust construction means minimal maintenance and long life
- Supplied in a carry case, the Highwayman is ideal for inclusion in the heavy vehicle tool kit
- 1300 N·m version has a spare ¾" output square included in the kit
- Multiplier head only (no reaction bars or plastic box) also available
  1300 N·m version, part no. 17218
  2700 N·m version, part no. 17219
- If calibration is required, a UKAS accredited calibration certificate may be ordered (at extra cost)

2	HT3 SERIES
17220	HT3 1300 N·m Kit ½" input x ¾" output
17221	HT3 2700 N·m Kit ¾" input x 1" output

Kits are supplied in a carrying case with a reaction bar and a reaction foot (17220 also contains a spare ¾" sq. dr.)

Model		HT3-1000	HT3-1300	HT3-2700
Part Number/s		180260	17220	17221
Multiplication Ratio	Nominal	5:1	5:1	5:1
	With Cranked Reaction	4.8:1	N/A	N/A
	With Straight Reaction	4.9:1	N/A	N/A
Dimensions (mm)	ØD	65	108	108
	H1	63	103	100
	H2	21	44	36
	L	273	398	398
	R1	55	77	85
	R2 min.	83	140	140
	R2 max.	143	212	212
	R3 max.	240	344	344
Tool Weight (kg)		2.7	3.8	3.8
Reaction Weight (kg)	Cranked	0.5	1.36	1.36
	Straight	0.69	1.06	1.06

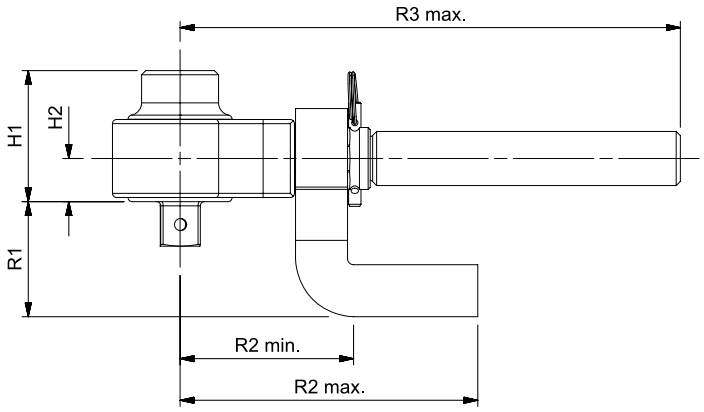

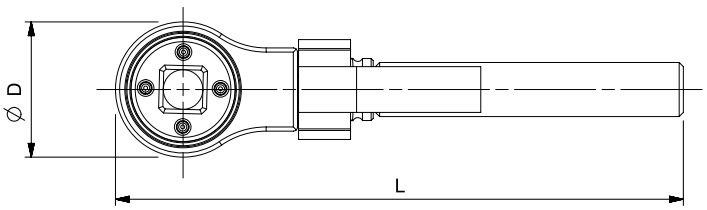

HANDTORQUE® HT4 SERIES

- Robust construction means minimal maintenance and long life
- True 15.5:1 (3000 N·m) or 26:1 (4500 N·m) torque multiplication, accuracy ±4%
- High ratios allow the use of a small torque wrench
- Supplied in carrying case with replacement square drive
- Anti Wind-Up Ratchet fitted to allow safer and more practical operation
- Angle protractor for easy torque and angle tightening
- If calibration is required, a UKAS accredited calibration certificate may be ordered (at extra cost)

4	HT4 SERIES
17022	HT4 3000 N·m ½" in 1" out AWUR
17021	HT4 4500 N·m ½" in 1" out AWUR

Model		HT4/15.5	HT4/26
Part Number/s		17022	17021
Multiplication Ratio		15.5:1	26:1
Dimensions (mm)	ØD	108	108
	H1	131	149
	H2	55	55
	L	504	504
	R max.	450	450
Tool Weight (kg)		6.1	7.0
Reaction Weight (kg)		1.9	1.9

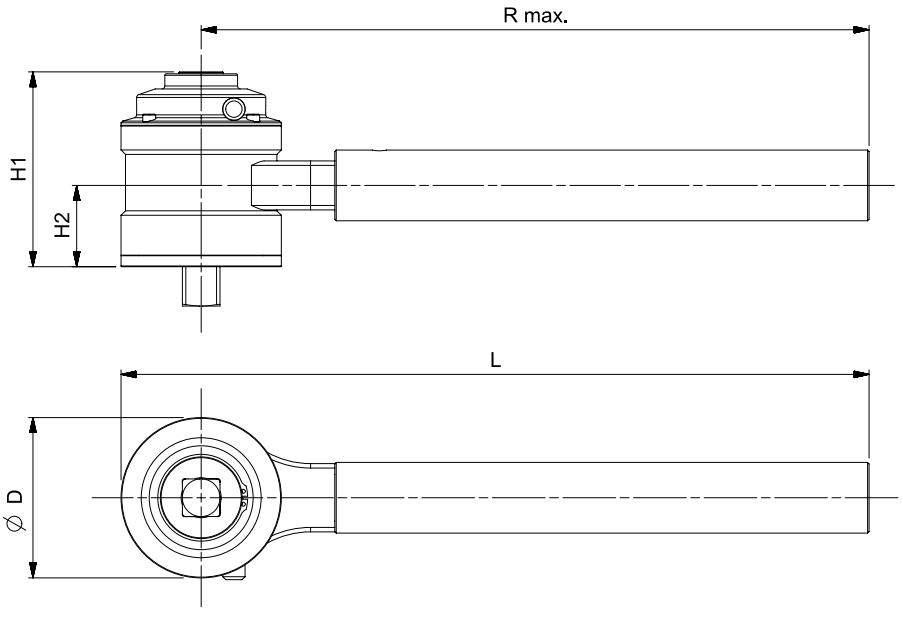

HANDTORQUE® COMPACT SERIES

Sockets not included

- Compact dimensions allow excellent access to applications and easy, safe handling
- Lightweight for torque capacity
- Supplied as standard with an aluminium reaction arm (Steel reactions for HT-52). Other options are available on request, including customised reactions
- Torque multiplication accuracy ±4%
- Robust, 48 tooth Anti Wind-Up Ratchet (AWUR) contains the forces generated during tightening for safe and easy operation
- Each multiplier is supplied with its own unique calibration certificate allowing the accurate calculation of input torque for critical applications

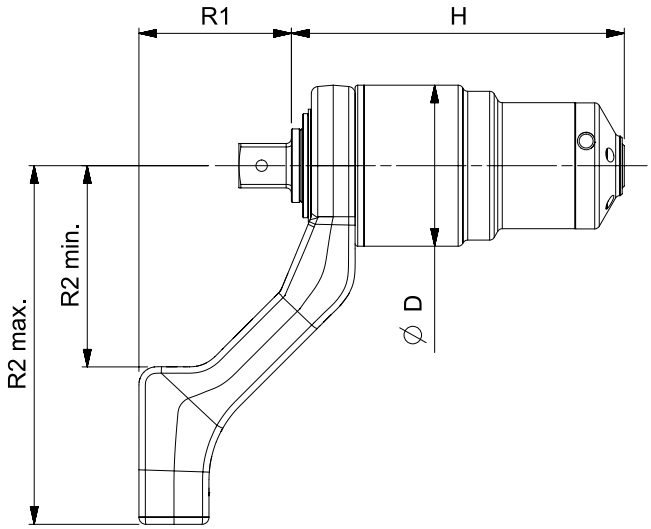

4	COMPACT SERIES
180200	HT-52/4.7 1000 N·m ½" in ¾" out
180201	HT-52/22.2 1000 N·m ⅜" in ¾" out
180202	HT-52/22.2 1000 N·m ½" in ¾" out
180203	HT-52/22.2 1000 N·m ⅜"in ¾" out AWUR
180204	HT-52/22.2 1000 N·m ½" in ¾" out AWUR
180205	HT-52/22.2 1000 N·m ⅜" in 1" out AWUR
180206	HT-52/22.2 1000 N·m ½" in 1" out AWUR
180208	HT-72/5.2 1500 N·m ½" in 1" out
180209	HT-72/5.2 1000 N·m ¾" in ¾" out
180210	HT-72/5.2 2000 N·m ¾" in 1" out
180212	HT-72/27 2000 N·m ½" in 1" out
180214	HT-72/27 2000 N·m ½" in 1" out AWUR
180215	HT-92/25 4000 N·m ½" in 1" out AWUR
180216	HT-119/25.5 7000 N·m ½" in 1½" out AWUR

11	NOSE EXTENSIONS FOR 72 SERIES
18349.006	6" long, SPM/SPF
18349.009	9" long, SPM/SPF
18349.012	12" long, SPM/SPF
18349.015	15" long, SPM/SPF
18349.018	18" long, SPM/SPF
18330.50	Telescopic Nose Assembly

The nose extensions shown above can also be used with HT-72s.
Note: Square drive fitted from existing tool. SPM = Spline Male. SPF = Spline Female.

Model		HT-52/4.7	HT-52/22.2	HT52/22.2 AWUR	HT-72/5.2	HT-72/5.2	HT-72/27	HT-72/27 AWUR	HT-92/25 AWUR	HT-119/25.5 AWUR
Part Number/s		180200	180201 180202	180203 180204 180205 180206	180209 180208	180210	180212	180214	180215	180216
Multiplication Ratio		4.7:1	22.2:1	22.2:1	5.2:1	5.2:1	27:1	27:1	25:1	25.5:1
Dimensions (mm)	ØD	52	52	52	72	72	72	72	92	119
	H	91	116	130	140	135	137	154	190	212
	R1	58	58	58	67	72	72	72	87	117
	R2 min.	71	71	71	91	91	91	91	115	151
	R2 max.	131	131	131	166	166	166	166	205	199
Tool Weight (kg)		1.0	1.3	1.4	2.7	2.7	2.7	3.2	5.4	9.3
Reaction Weight (kg)		0.85	0.85	0.85	0.66	0.66	0.66	0.66	1.35	2.10

HANDTORQUE® COMPACT SERIES KITS

SpinNor included
Part No. 19253

Multiplier & Torque Wrench Kits

For convenience, it is now possible to purchase a torque multiplier from the 'Compact Series' packaged with the appropriate torque wrench, up to 4000 N·m. This allows the operator to arrive at the bolting application with everything needed in one robust carry case. Space has also been allowed in the carry case for accessories such as sockets.

The torque multiplier is supplied with its own unique calibration certificate and the torque wrench is supplied with a Declaration of Conformance, allowing accurate calculation of input torque to the multiplier for critical applications.

- All kits include a 'SpinNor' which aids fast reaction location
- All models include an Anti Wind-up Ratchet on the multiplier

4	HT COMPACT SERIES & TORQUE WRENCH KITS
18186	HT52 1000 N·m ¾" out + NorTorque® 60 ½" Dual Scale
18192	HT72 2000 N·m 1" out + NorTorque® 100 ½" Dual Scale
18195	HT92 4000 N·m 1" out + NorTorque® 200 ½" Dual Scale
19253	½" SpinNor

HANDTORQUE® STANDARD SERIES

- Torque multiplication accuracy ±4%
- High ratios allow the use of a small torque wrench, multipliers can be used where access is limited
- Anti Wind-Up Ratchet available on models of 25:1 ratio and above
- Other reaction styles can be designed to suit specific applications
- Electronic torque transducers can be fitted for precise torque monitoring, see page 87
- Other models available up to 300,000 N·m
- If calibration is required, a UKAS accredited calibration certificate may be ordered (at extra cost) up to 6000 N·m

4	STANDARD SERIES
16010	HT 1/5 1700 N·m ½" in ¾" out
16012.HD	HT 2/5 1700 N·m ¾" in 1" out
16034.HD	HT 2/25 1700 N·m ½" in 1" out
16089.HD	HT 2/25 1700 N·m ½" in 1" out AWUR
16014	HT 5/5 3400 N·m ¾" in 1" out
16028	HT 5/25 3400 N·m ½" in 1" out
16090	HT 5/25 3400 N·m ½" in 1" out AWUR
16016	HT 6/5 3400 N·m ¾" in 1½" out
16024	HT 6/25 3400 N·m ½" in 1½"out
16092	HT 6/25 3400 N·m ½" in 1½"out AWUR
16093	HT 6/125 3400 N·m ½" in 1½"out AWUR
16067	HT 7/5 6000 N·m ¾" in 1½"out
16018	HT 7/25 6000 N·m ½" in 1½"out
16065	HT 7/25 6000 N·m ½" in 1½"out AWUR
16068	HT 7/125 6000 N·m ½" in 1½"out AWUR
16059	HT 9/25 9500 N·m ¾" in 1½" out
16070	HT 9/25 9500 N·m ¾" in 1½" out AWUR
16071	HT 9/125 9500 N·m ½" in 1½" out AWUR
16082	HT 11/25 20000 N·m ¾" in 2½" out
16049	HT 11/125 20000 N·m ½" in 2½" out AWUR
18085	HT 12/87.5 34000 N·m ¾" in 2½" out AWUR
16053	HT 13/125 47500 N·m ¾" in 2½" out AWUR

Other gear ratios may be available upon request.
If AWUR is not required please enquire for part number.
HT 13/125 fitted with weld prepared reaction ring as standard.
AWUR = Anti Wind Up Ratchet. See page 43

For Spares Kits for Norbar Multipliers, please see page 112.

HANDTORQUE® STANDARD SERIES

Model		HT 1/5	HT 2/5	HT 2/25	HT 2/25 AWUR	HT 5/5	HT 5/25	HT 5/25 AWUR	HT 6/5	HT 6/25	HT 6/25 AWUR	HT 6/125 AWUR
Part Number/s		16010	16012.HD	16034.HD	16089.HD	16014	16028	16090	16016	16024	16092	16093
Multiplication Ratio		5:1	5:1	25:1	25:1	5:1	25:1	25:1	5:1	25:1	25:1	125:1
Dimensions (mm)	ØD	108	108	108	108	119	119	119	119	119	119	119
	H	83	98	98	114	106	127	132	106	128	134	159
	L	303	303	303	303	355	355	355	355	355	355	355
	R1	N/A	N/A	N/A	N/A	N/A	N/A	N/A	N/A	N/A	N/A	N/A
	R2 min.	83	83	83	83	86	86	86	86	86	86	86
	R2 max.	216	216	216	216	263	263	263	263	263	263	263
Tool Weight (kg)		3	3.2	4.6	6.7	4.7	6.4	7.5	4.7	6.4	7.5	9
Reaction Weight (kg)		2.2	2.2	2.2	2.2	2.5	2.5	2.5	2.5	2.5	2.5	2.5

Model		HT 7/5	HT 7/25	HT 7/25 AWUR	HT 7/125 AWUR	HT 9/25	HT 9/25 AWUR	HT 9/125 AWUR	HT 11/25	HT 11/125 AWUR	HT 12/87.5 AWUR	HT 13/125 AWUR
Part Number/s		16067	16018	16065	16068	16059	16070	16071	16082	16049	18085	16053
Multiplication Ratio		5:1	25:1	25:1	125:1	25:1	25:1	125:1	25:1	125:1	87.5:1	125:1
Dimensions (mm)	ØD	144	144	144	144	184	184	184	212	212	248	315
	H	136	157	162	188	166	162	182	208	235	281	322
	L	423	423	423	423	448	448	448	609	609	325	341
	R1	84	84	84	84	84	84	84	N/A	N/A	N/A	N/A
	R2 min.	150	150	150	150	175	175	175	320	320	N/A	N/A
	R2 max.	331	331	331	331	351	351	351	500	500	N/A	N/A
Tool Weight (kg)		8.1	9.6	10.7	12.2	16.3	17.4	18.9	31.7	32.1	41.5	95.2
Reaction Weight (kg)		6.3	6.3	6.3	6.3	8.3	8.3	8.3	13.3	13.3	6.5	6.9

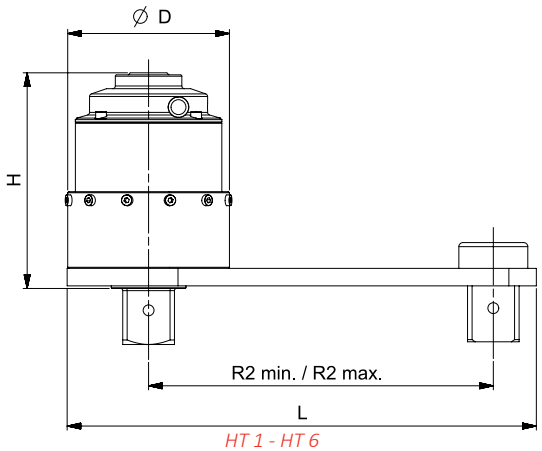

HT 1 - HT 6

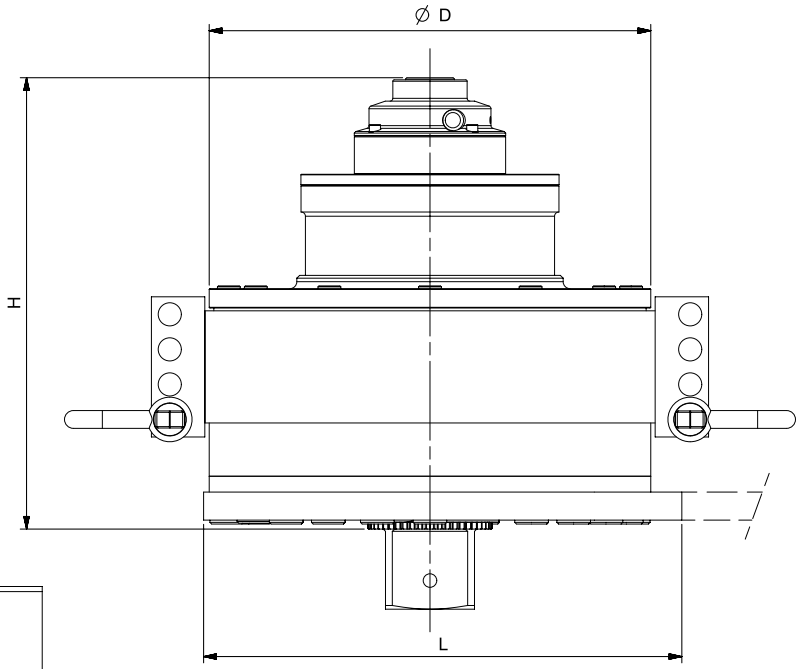

HT 12 - HT 13

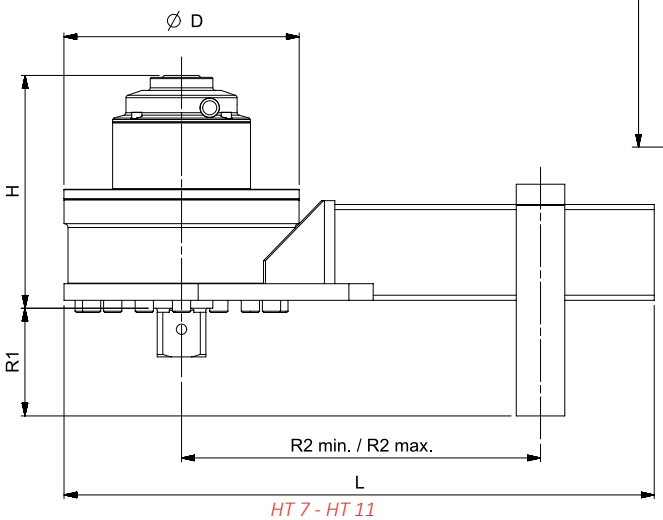

HT 7 - HT 11

HANDTORQUE® SMALL DIAMETER SERIES

- HandTorque® models HT30 and 60 have a higher torque output for a given gearbox diameter than the Standard Series
- Reduced diameter enables better access, particularly on pipe flanges
- Reaction taken from high strength spline
- Reaction foot can slide on the spline to allow sockets of various lengths
- Anti Wind-Up Ratchet available on all models (except 5:1 ratios), allowing safer and more practical operation
- If calibration is required, a UKAS accredited calibration certificate may be ordered (at extra cost)

4	SMALL DIAMETER SERIES
18003	HT 30/5 3000 N·m ¾" in 1" out
18004	HT 30/15 3000 N·m ½" in 1" out AWUR
18006	HT 30/25 3000 N·m ½" in 1" out AWUR
18008	HT 60/25 6000 N·m ½" in 1½" out AWUR

HT30s and 60s are supplied with a cranked reaction foot. Most small diameter gearboxes are available without AWUR. Please enquire for part numbers.

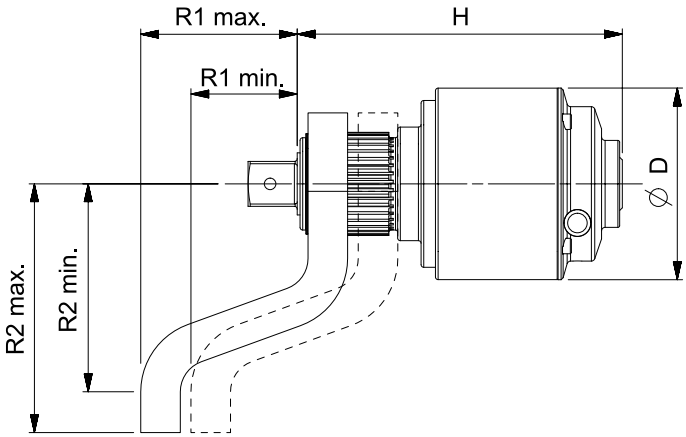

Model		HT 30/5	HT 30/15 AWUR	HT 30/25 AWUR	HT 60/25 AWUR
Part Number/s		18003	18004	18006	18008
Multiplication Ratio		5:1	15:1	25:1	25:1
Dimensions (mm)	ØD	108	108	108	119
	H	164	183	183	218
	R1 min.	60	60	60	94
	R1 max.	88	88	88	119
	R2 min.	117	117	117	146
	R2 max.	140	140	140	174
Tool Weight (kg)		5	7	7	10.6
Reaction Weight (kg)		2	2	2	4

UKAS ACCREDITED CALIBRATION CERTIFICATION

The part numbers shown below are for 'As Found', for new manual torque multiplying gearboxes up to the maximum capacity shown.

12	ONE DIRECTION
HTCC2.CW	Up to 6000 N·m / 5000 lbf·ft

12	TWO DIRECTIONS
HTCC2.CW+CCW	Up to 6000 N·m / 5000 lbf·ft

POWERED TORQUE TOOLS

Electronic Tools

The EvoTorque® is an electronic torque tool designed for applying torque to threaded fasteners. The unique 'Intelligent Joint Sensing' technology will accurately tighten to the correct torque without the risk of excess overshoot or undershoot that is common in other electric tools.

EvoTorque® utilises patented motor technology to give unprecedented joint control from hard through to soft joints. Water and dust sealed to IP44 the tool has third party sound verification (L_{pA}) that does not exceed 70 dB(A) and a vibration level of 0.304m/s² for smooth and quiet delivery.

Models are available from 1000 N·m to 7000 N·m in both 110V and 230V.

Pneumatic Tools

PneuTorque® operation is quiet - less than 85dB(A) with absolutely no impacting. These two factors make PneuTorques comfortable for the operator to use, reducing fatigue and consequently increasing safety.

PneuTorques provide accurate torque control - on a given joint they will stall repeatably to within ±5%. Using electronic shut off, this repeatability can be improved to ±2%.

The PneuTorque® consists of a robust air motor driving a Norbar multiplier with three or more stages of epicyclic gearing.

Torque control is achieved by adjustment of the air pressure. An air pressure versus torque graph and a calibration certificate is supplied with each tool and allows specific torque values to be set. For more critical applications PneuTorques can be fitted with a torque transducer and the precise torque output displayed. The tool can then be shut off at the desired torque either manually or automatically using suitable control circuitry.

Models are available up to 300,000 N·m (220,000 lbf·ft).

Powered Torque Tools	51
EvoTorque®2	53
PneuTorque® PTS™ Series	57
PneuTorque® PTS™ Remote	59
PneuTorque® PTM Series	60
PneuTorque® PTME-72 Series	63
ET, PTS™, PTM Nose Extensions	64
Optional Reaction Plates	65
PTS™ and PTM Dual Trigger	67
Secondary Handle	67
Right Angle Gearbox	68
PneuTorque® Standard Series	71
PneuTorque® Standard Series - Optional Accessories	74
Lubro Control Units	74
Tool Controllers	75

POWERED TORQUE TOOLS

What is a PneuTorque® Pneumatic Wrench?

The PneuTorque® consists of a robust air motor driving a Norbar multiplier with three or more stages of epicyclic gearing.

Torque control is achieved by adjustment of the air pressure. An air pressure versus torque graph and a calibration certificate is supplied with each tool and allows specific torque values to be set. For more critical applications, PneuTorques can be fitted with a torque transducer and the precise torque output displayed. The tool can then be shut off at the desired torque either manually or automatically using suitable control circuitry.

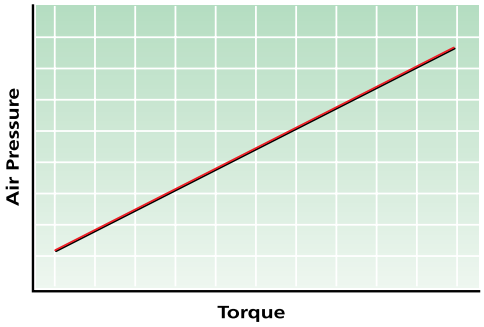

Why use PneuTorque® Pneumatic Wrenches?

Hand operated torque multipliers are ideal for low volume or intermittent use or when there is no power source available. However, for production lines or whenever a large number of bolts is involved, a powered multiplier will save a considerable amount of time.

PneuTorque® operation is quiet – less than 85dB(A) with absolutely no impacting. These two factors make PneuTorques comfortable for the operator to use, reducing fatigue and consequently increasing safety.

PneuTorques provide accurate torque control – on a given joint they will stall repeatably to within ±5%. Using electronic shut off, this repeatability can be improved to ±2%.

Summary of PneuTorque® Advantages

- Sound pressure level does not exceed 85dB(A)
- No impacting means less damage to the tool, socket and bolted assembly
- Less operator fatigue, results in increased safety
- Powerful – models available up to 300,000 N·m (220,000 lbf·ft)
- Repeatability of ±5% for accurate torque control
- A wide range of attachments and accessories make PneuTorques adaptable to many applications

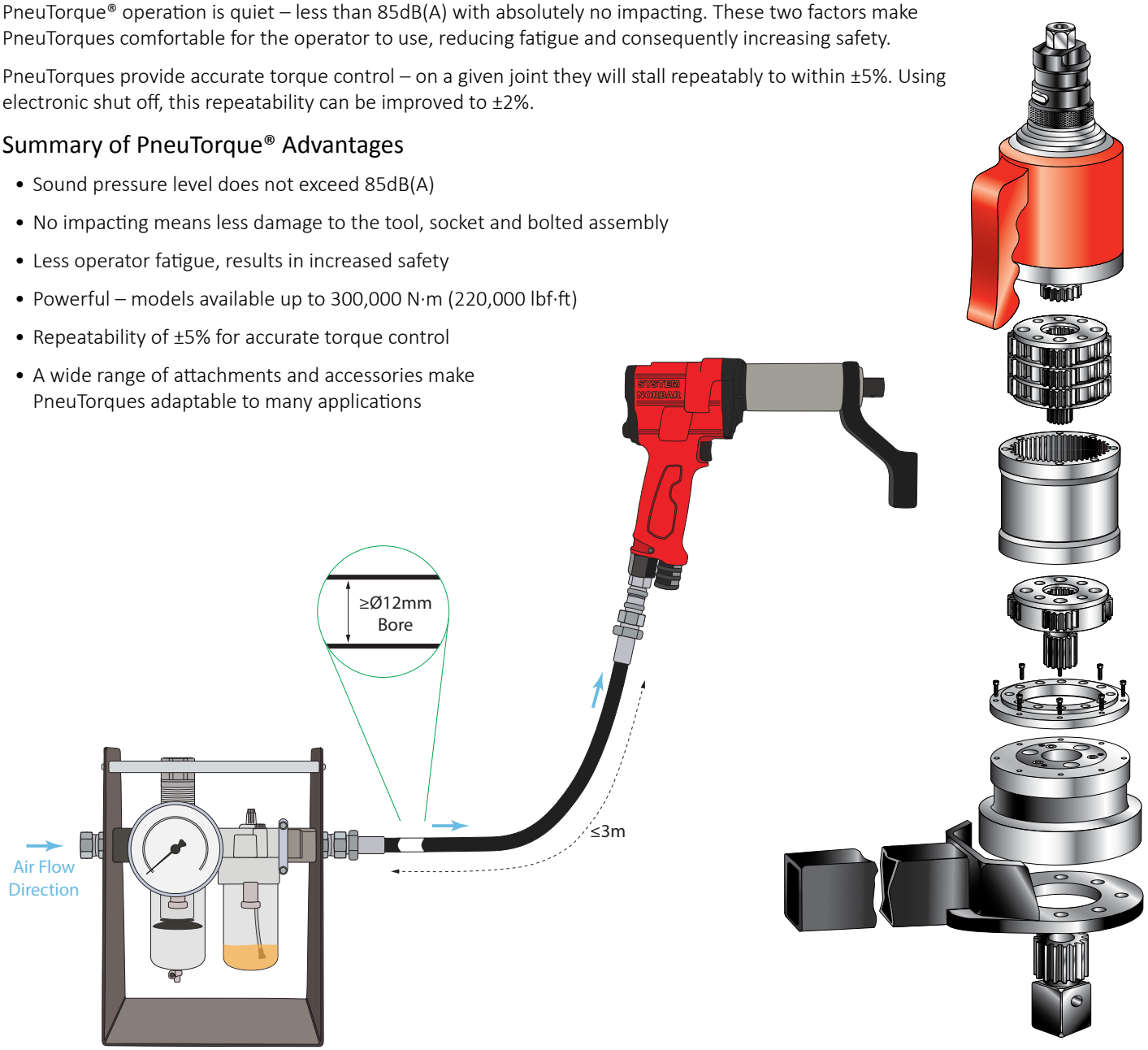

POWERED TORQUE TOOLS

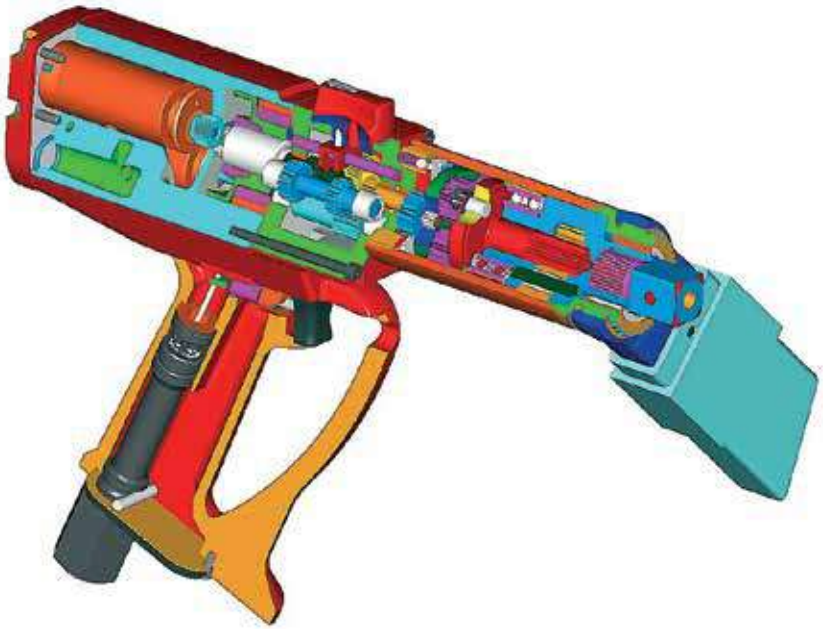

PneuTorque® Applications

The smooth and continuous torque output of the PneuTorque® makes these tools suitable for a wide range of bolting and non-bolting applications.

Bolting

PneuTorques are ideally suited to tightening and untightening bolts of up to 150mm diameter. The following is just a small selection of applications:

- Wheel nuts on trucks, buses and large machinery
- Structural steelwork
- High pressure joints eg. Pipelines, boiler feed pumps and pressure vessels
- Engine head bolts
- Injector heads on plastic injection moulding machines
- Heat exchangers
- Heavy vehicle production eg. Chassis and suspension bolts

Non-bolting

Whenever a high continuous torque is needed, PneuTorques can be used as the power source. Typical applications include:

- Ball valve operation
- Powering wagons and gantries
- Barring of large diesel engines (turning the crankshaft) during build
- Weld testing by applying test torques
- Roller adjustment in steel mills and paper mills
- Valving of gas bottles

EVOTORQUE®2

The EvoTorque®2 is an electronic torque tool designed to accurately apply torque to threaded fasteners. Tools are factory calibrated to ±3% of reading. The unique 'intelligent joint sensing' technology continually measures the joint during tightening and when necessary, employs dynamic braking to avoid torque over-shoot due to motor inertia. Consequently, EvoTorque®2 can apply torque accurately over a wide range of joint rates from hard (high torque rate) through to soft (low torque rate). All EvoTorque®2 tools are highly tolerant of supply voltage and frequency variation. When the tool runs, it will run accurately. If the supply voltage is outside of tolerance then, as a safety feature, the tool will be prevented from starting.

The EvoTorque®2 has the ability to memorise multiple targets, work IDs, user IDs and readings. A work sequence (flow) can be performed on the EvoTorque®2, taking the user through a pre-defined tightening sequence. The tool has four modes of operation: Torque, Torque & Angle, Torque & Angle with Final Torque and Torque Audit. The unique Audit Mode is a sophisticated feature for testing pre-tightened bolts with minimal impact on the original fastening torque and can provide quality control data for monitoring joint performance over time. EvoTorque®2 builds on the original tool with these additional features:

- Multiple units of torque measurement, N·m, lbf·ft, ft·lb and kgf·m
- Calibrated from 20% to 100% of tool range
- Torque, Torque & Angle and Torque Audit modes available
- In Torque & Angle Mode and Audit Mode, torque can be set from 10% of tool maximum
- Display and on-board storage of final torque or torque and angle values
- 3000 reading memory, time and date stamped
- Clear indication of successful joint application
- USB and Bluetooth® 4.0 data transfer (also called Bluetooth® Smart)
- Complimentary PC software 'EvoLog' for data management and tool configuration
- 12 user IDs can be downloaded to the tool and results can be stored against individual users
- 20 unique standalone targets plus 20 unique work group targets for each work group
- Results can be output in CSV (comma-separated values) format for users not able to use EvoLog
- Ability to produce and store real time graphs via EvoLog
- Torque & Angle with Final Torque
- 'Usage' counter gives the ability to see the amount of times the tool has been used since the last reset
- "Operation Direction" feature designed primarily for undoing bolts. When doing sequence tightening, it is now possible to undo an incorrectly tightened bolt without interrupting the sequence
- Two stage tightening gives faster application of a Snug Torque & Angle Target
- "Turn Angle" option can be used to check if bolts have already been tightened in an assembly process
- Tool can be integrated into third party control systems
- Two different lock levels, lock level 1 as per previous lock, lock level 2 will not allow user to exit the run screen or change the target
- Maximum Audit Mode target angle of 720 degrees

EVOTORQUE®2

Colour OLED display shows torque and angle values

Display can be powered up independently of tool for data transfer (via USB)

Built in Bluetooth® for wireless data transfer

Communication between tool and PC either wirelessly using Bluetooth® 4.0 or wired using supplied USB cable

EvoTorque®2's Intelligent joint sensing technology always detects which type of bolt you are working with.

Hard joints

(High Torque Rate*)

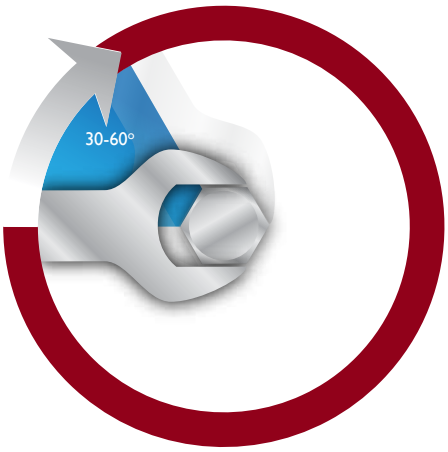

Joints completed within the range 30-60 degrees

Soft joints

(Low Torque Rate*)

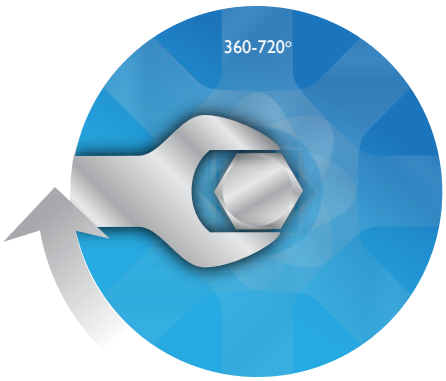

Joints completed within the range 360-720 degrees

*High torque rate and low torque rate as defined by ISO5393 “Rotary tools for threaded fasteners- Performance test method”

The EvoTorque®2 has been designed to complete joints of 30° and above to within the tools ±3% accuracy. For joints below 30° use the tools audit mode feature.

EVOTORQUE®2

Traditional electronic torque tools give vastly different results depending on the joint type. Norbar's intelligent joint sensing technology eliminates these issues so that you can be confident in your bolting work.

First generation

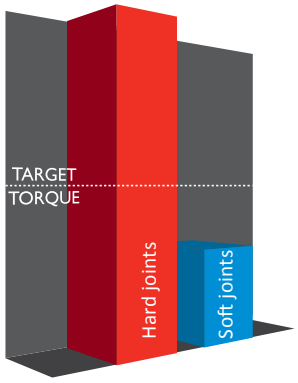

Best of present generation

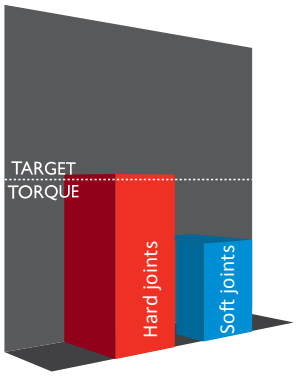

New generation EvoTorque®2

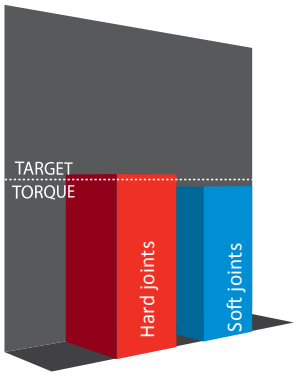

ET2-72 (1000 & 1350)

ET2-72 (2000)

ET2-92 (2700 & 4000)

ET2-119 (6000 & 7000)

11	EVOTORQUE® 2 - 110 V
180230.B06	ET2-72-1000-110 ¾" sq. dr., 200 - 1000 N·m
180231.B06	ET2-72-1350-110 ¾" sq. dr., 270 - 1350 N·m
180232.B08	ET2-72-2000-110 1" sq. dr., 400 - 2000 N·m
180233.B08	ET2-92-2700-110 1" sq. dr., 540 - 2700 N·m
180234.B08	ET2-92-4000-110 1" sq. dr., 800 - 4000 N·m
180235.B12	ET2-119-6000-110 1½" sq. dr., 1200 - 6000 N·m
180236.B12	ET2-119-7000-110 1½" sq. dr., 1400 - 7000 N·m

11	EVOTORQUE® 2 - 230 V
180220.B06	ET2-72-1000-230 ¾" sq. dr., 200 - 1000 N·m
180221.B06	ET2-72-1350-230 ¾" sq. dr., 270 - 1350 N·m
180222.B08	ET2-72-2000-230 1" sq. dr., 400 - 2000 N·m
180223.B08	ET2-92-2700-230 1" sq. dr., 540 - 2700 N·m
180224.B08	ET2-92-4000-230 1" sq. dr., 800 - 4000 N·m
180225.B12	ET2-119-6000-230 1½" sq. dr., 1200 - 6000 N·m
180226.B12	ET2-119-7000-230 1½" sq. dr., 1400 - 7000 N·m

The EvoTorque®2 is supplied in a cardboard box as standard, if a sturdier case is required Norbar can provide a Peli Case at an additional charge. Please add .PEL on to the end of the part number when ordering. Optional Peli Case at additional cost; part number 26969 - for tools up to and including 2000 N·m and part number 26971 for tools 2700 N·m and above.

Standard Box

Optional Peli Case
Part No. 26969 or 26971

EVOTORQUE®2

Model		ET-72-1000 ET-72-1350	ET-72-2000	ET-92-2700 ET-92-4000	ET-119-6000 ET-119-7000
Part Number/s		180230.B06 180220.B06 180231.B06 180221.B06	180232.B08 180222.B08	180233.B08 180223.B08 180234.B08 180224.B08	180235.B12 180225.B12 180236.B12 180226.B12
Output Speed (rpm)		21 (ET-72-1000) 17 (ET-72-1350)	11	8.5 (ET-92-2700) 6 (ET-92-4000)	3.3
Dimensions (mm)	ØD	72	72	92	119
	H1	45	45	45	45
	H2	317	317	317	317
	H3	109	109	109	109
	L	366	407	417	440
	R1	71	76	70	90
	R2 min.	124	124	125	162
	R2 max.	167	167	175	210
Tool Weight (kg)		10.4	10.8	12.85	16.8
Reaction Weight (kg)		1.5	1.5	2.6	3.9

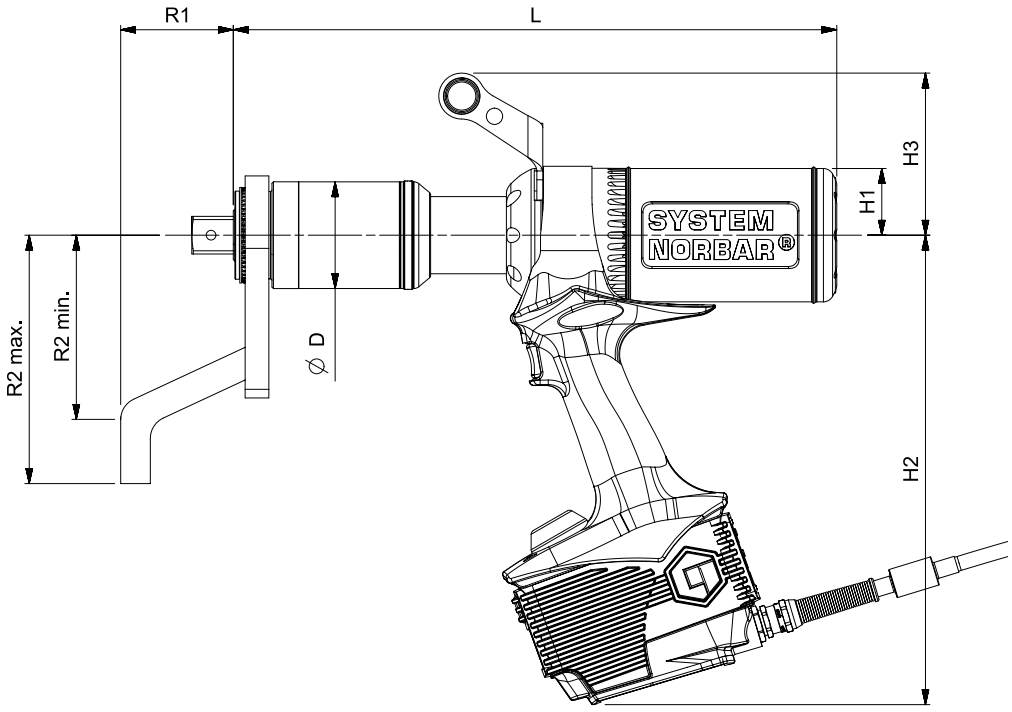

PNEUTORQUE® PTS™ SERIES

The PTS™ is the result of an extensive design project to produce an efficient air motor, purpose built for this application in an accurate torque tool. The new air motor is then married to Norbar's respected gearbox range, sharing common torque reaction accessories with PTM and EvoTorque® tools.

- Models 500 – 7000 N·m with pistol grip handle
- Designed to offer excellent power-to-weight ratio
- Up to 2.5 kg weight saving compared with PT equivalents
- Easily accessible switch for forward and reverse operation
- ±3% repeatability of reading from 20% to 100% of range
- Air coupling designed for safety and rapid operation
- Quiet operation - The sound pressure level is 77 dB(A) [the PTS™ 4000 N·m is 79 dB(A)]. Uncertainty K =3 dB. The sound emission values were determined according to BS EN ISO 11148-6
- Directional exhaust barrel directs exhaust away from operator
- Replaceable square drive
- Fast operation for rapid bolt rundown. Up to 60% faster than the previous PT model.
- Non-impacting- low vibration levels for comfortable and safe use. The vibration total value does not exceed 2.5m/s²
- Steel reactions supplied as standard. Bespoke reactions available

11	PTS™-52 SERIES - STALL TOOLS - BI-DIRECTIONAL
180241.B06	¾" sq. dr. 100 - 500 N·m, 74 - 370 lbf·ft
180242.B06	¾" sq. dr. 160 - 800 N·m, 118 - 590 lbf·ft

11	PTS™-72 SERIES - STALL TOOLS - BI-DIRECTIONAL
180243.B06	¾" sq. dr. 200 - 1000 N·m, 147 - 738 lbf·ft
180244.B08	1" sq. dr. 270 - 1350 N·m, 200 - 1000 lbf·ft
180245.B08	1" sq. dr. 400 - 2000 N·m, 295 - 1475 lbf·ft

11	PTS™-80 SERIES - STALL TOOLS - BI-DIRECTIONAL
180246.B08	1" sq. dr. 540 - 2700 N·m, 398 - 1991 lbf·ft

11	PTS™-92 SERIES - STALL TOOLS - BI-DIRECTIONAL
180247.B08	1" sq. dr. 800 - 4000 N·m, 590 - 2950 lbf·ft
180247.B12	1½" sq. dr. 800 - 4000 N·m, 590 - 2950 lbf·ft

11	PTS™-119 SERIES - STALL TOOLS - BI-DIRECTIONAL
180248.B12	1½" sq. dr. 1200 - 6000 N·m, 885 - 4425 lbf·ft
180249.B12	1½" sq. dr. 1400 - 7000 N·m, 1030 - 5200 lbf·ft

PNEUTORQUE® PTS™ SERIES

PTS™-52

PTS™-72

PTS™-80

PTS™-92

PTS™-119

Model		PTS™-52-500 PTS™-52-800	PTS™-72-1000 PTS™-72-1350	PTS™-72-2000	PTS™-80-2700	PTS™-92-4000	PTS™-119-6000 PTS™-119-7000
Part Number/s		180241.B06 180242.B06	180243.B06 180244.B08	180245.B08	180246.B08	180247.B08 180247.B12	180248.B12 180249.B12
Output Speed (rpm)		35.5 (PTS™-52-500) 25.7 (PTS™-52-800)	20.4 (PTS™-72-1000) 14.7 (PTS™-72-1350)	9.2	7.3	5.3	2.6
Dimensions (mm)	ØD	Ø52	Ø72	Ø72	Ø80	Ø92	Ø119
	H1	30	30	30	30	30	30
	H2	243	243	243	243	243	243
	L	263	290	324	290	347	369
	R1	59	76	76	76	70	90
	R2 min.	71	124	124	124	125	162
	R2 max.	131	167	167	167	175	210
Tool Weight (kg)		4.2	6.24	6.6	6.15	8.95	12.52
Reaction Weight (kg)		0.85	1.4	1.4	1.4	2.5	3.8

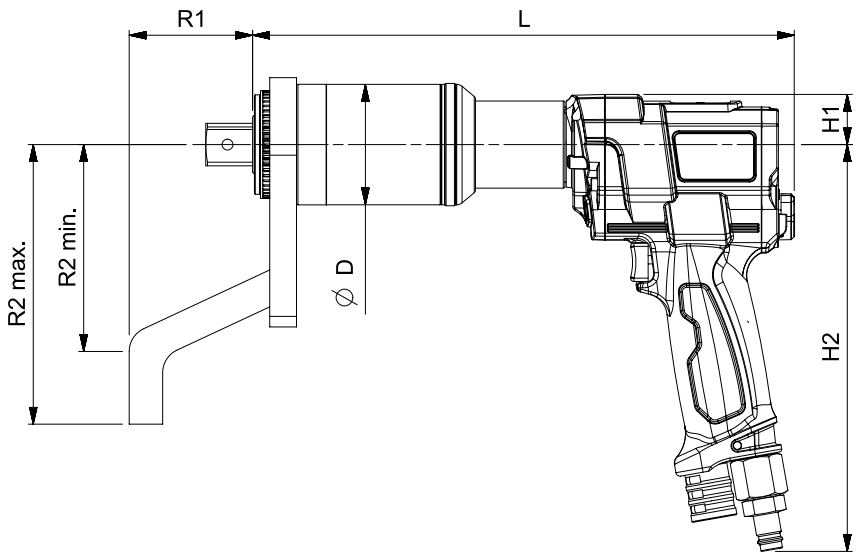

PNEUTORQUE® PTS™ REMOTE

New Range

Remote control versions have no direction control on the tool but rely on external pneumatic circuitry to provide this function. This opens up numerous application possibilities for the PneuTorque® ranging from simple stall shut-off in a hazardous working environment to sophisticated, multi-spindle torque and angle shut-off systems.

- Designed to offer excellent power-to-weight ratio
- ±3% repeatability of reading from 20% to 100% of range
- Replaceable square drive

NOTE: For full versatility, PTS™ Remotes are supplied without reaction see pages 65-66 for options or discuss bespoke engineered options with Norbar.

11	PTS™ REMOTE SERIES
180271.B06	¾" sq. dr. 100 - 500 N·m, 74 - 370 lbf·ft
180272.B06	¾" sq. dr. 160 - 800 N·m, 118 - 590 lbf·ft
180273.B06	¾" sq. dr. 200 - 1000 N·m, 147 - 738 lbf·ft
180274.B08	1" sq. dr. 270 - 1350 N·m, 200 - 1000 lbf·ft
180275.B08	1" sq. dr. 400 - 2000 N·m, 295 - 1475 lbf·ft
180276.B08	1" sq. dr. 540 - 2700 N·m, 398 - 1991 lbf·ft
180277.B08	1" sq. dr. 800 - 4000 N·m, 590 - 2950 lbf·ft
180277.B12	1½" sq. dr. 800 - 4000 N·m, 590 - 2950 lbf·ft
180279.B12	1½" sq. dr. 1400 - 7000 N·m, 1030 - 5200 lbf·ft

Model		PTS™ REMOTE 52-500	PTS™ REMOTE 52-800	PTS™ REMOTE 72-1000	PTS™ REMOTE 72-1350	PTS™ REMOTE 72-2000	PTS™ REMOTE 80-2700	PTS™ REMOTE 92-4000	PTS™ REMOTE 92-4000	PTS™ REMOTE 119-7000
Part Number/s		180271.B06	180272.B06	180273.B06	180274.B08	180275.B08	180276.B08	180277.B08	180277.B12	180279.B12
Output Speed (rpm)		27.8	20.1	16	11.5	7.2	5.7	4.1	4.1	2
Dimensions (mm)	ØD	52	52	72	72	72	80	92	92	119
	H1	29	29	29	29	29	29	29	29	29
	H2	78	78	78	78	78	78	78	78	78
	L	284	284	311	311	344	311	362	362	385
	W	70	70	70	70	70	70	70	70	70
Tool Weight (kg)		4.1	4.1	6.14	6.14	6.5	6.05	8.85	8.85	12.42

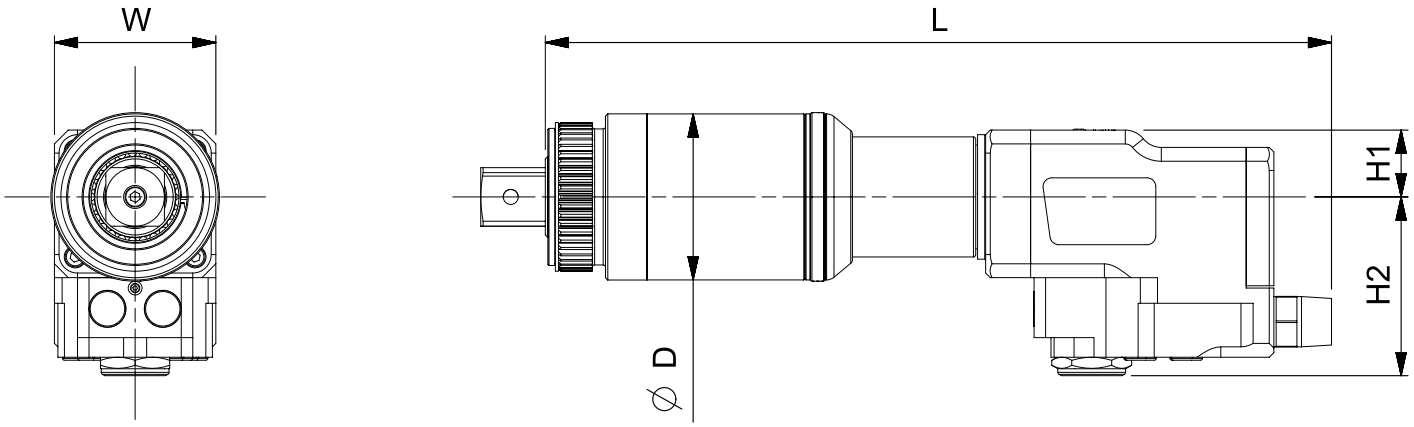

PNEUTORQUE® PTM

Using twin motor technology, the PTM series of PneuTorques is engineered to be amongst the lightest and fastest on the market. For example, the 800 N·m version has a gearbox diameter of just 52mm, allowing excellent bolt access, and has a maximum free running speed of 224 rpm. Torque control is normally achieved by adjustment of air pressure. An air pressure versus torque graph and a calibration certificate is supplied with each tool.

Norbar Torque Tools Ltd

S.I. Certificate of Calibration

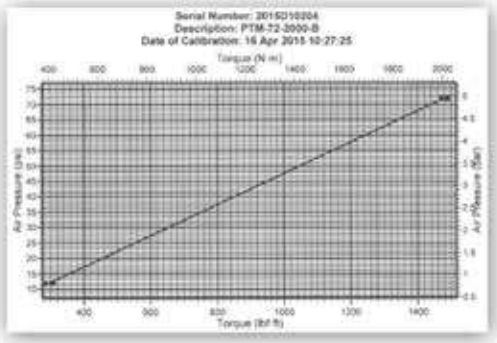

PTM-52, PTM-72 and PTME-72 also offer the option of electronic torque control in two versions. Both versions incorporate a torque transducer on the output of the tool. Internal Control (IC) tools have a torque display, user interface and a solenoid valve to shut-off the air supply at a pre-determined torque. External Control (EC) tools incorporate a solenoid valve and three coloured LEDs for the indication of low, within tolerance or high results. However, all control functions and torque display are housed in an external controller unit (purchased separately). External controllers can give a much greater range of functionality than is possible on the IC version of the tools.

- Exceptionally compact 52mm and 72mm gearboxes result in light, well balanced tools
- Fitted with a light robust aluminium reaction plate as standard
- Other reaction plates are available for maximum versatility
- Quiet- less than 83 dB(A) when free running
- Fast operation for rapid bolt run-down
- Internal Control (IC) versions incorporate torque transducer, torque setting and display panel and solenoid valve to shut off the air supply at the desired torque
- External Control (EC) versions incorporate torque transducer and output for an external controller. Ideal for production lines
- IC and EC tools have an accuracy of ±2%
- ±5% repeatability of reading from 20% to 100% of range

Internal Control (IC) Panel

External Control (EC) Panel

PNEUTORQUE® PTM

11	PTM-52 SERIES - STALL TOOLS - BI-DIRECTIONAL*	
18100.B06	¾" sq. dr. 100 - 500 N·m, 74 - 370 lbf·ft	
18101.B06	¾" sq. dr. 160 - 800 N·m, 118 - 590 lbf·ft	

*Comes supplied in a carry case.

Stall tools are also available as forward only tools, replace B with F when ordering.

11	PTM-52 SERIES - SHUT-OFF TOOLS - BI-DIRECTIONAL - INTERNAL	
18110.B06	¾" sq. dr. 100 - 500 N·m, 74 - 370 lbf·ft	(IC)
18111.B06	¾" sq. dr. 160 - 800 N·m, 118 - 590 lbf·ft	(IC)

11	PTM-52 SERIES - SHUT-OFF TOOLS - BI-DIRECTIONAL - EXTERNAL (Requires Tool Controller, see page 75)	
18120.B06	¾" sq. dr. 100 - 500 N·m, 74 - 370 lbf·ft	(EC)
18121.B06	¾" sq. dr. 160 - 800 N·m, 118 - 590 lbf·ft	(EC)

11	PTM-52 SERIES WITH ANGLE CONTROL	
18125.B06	¾" sq. dr. 100 - 500 N·m, 74 - 370 lbf·ft	(IC)
18126.B06	¾" sq. dr. 160 - 800 N·m, 118 - 590 lbf·ft	(IC)
18136.B06	¾" sq. dr. 160 - 800 N·m, 118 - 590 lbf·ft	(EC)

All the above are supplied with a ¾" square drive (Part No. 18544).

11	ACCESSORIES
18545	1" square drive for above tools

NOTE: Contact Norbar for more information on PTM-52 200 models

PTM-52 with Internal Control (IC) Panel

11	PTM-72 SERIES - STALL TOOLS - BI-DIRECTIONAL*
18102.B06	¾" sq. dr. 200 - 1000 N·m, 147 - 738 lbf·ft
18103.B08	1" sq. dr. 270 - 1350 N·m, 200 - 1000 lbf·ft
18104.B08	1" sq. dr. 400 - 2000 N·m, 295 - 1475 lbf·ft

*Comes supplied in a carry case.

Stall tools are also available as forward only tools, replace B with F when ordering.

11	PTM-72 SERIES - SHUT-OFF TOOLS - BI-DIRECTIONAL - INTERNAL	
18112.B06	¾" sq. dr. 200 - 1000 N·m, 147 - 738 lbf·ft	(IC)
18113.B08	1" sq. dr. 270 - 1350 N·m, 200 - 1000 lbf·ft	(IC)
18114.B08	1" sq. dr 400 - 2000 N·m, 295 - 1475 lbf·ft	(IC)

11	PTM-72 SERIES - SHUT-OFF TOOLS - BI-DIRECTIONAL - EXTERNAL (Requires Tool Controller, see page 75)	
18122.B06	¾" sq. dr. 200 - 1000 N·m, 147 - 738 lbf·ft	(EC)
18123.B08	1" sq. dr. 270 - 1350 N·m, 200 - 1000 lbf·ft	(EC)
18124.B08	1" sq.dr. 400 - 2000 N·m, 295 - 1475 lbf·ft	(EC)

11	PTM-72 SERIES WITH ANGLE CONTROL	
18127.B06	¾" sq. dr. 200 - 1000 N·m, 147 - 738 lbf·ft	(IC)
18128.B08	1" sq. dr. 270 - 1350 N·m, 200 - 1000 lbf·ft	(IC)
18129.B08	1" sq. dr. 400 - 2000 N·m, 295 - 1475 lbf·ft	(IC)
18138.B08	1" sq. dr. 270 - 1350 N·m, 200 - 1000 lbf·ft	(EC)

PNEUTORQUE® PTM

The PTM-92 and PTM-119 tools bring the speed advantage of the twin motor handle to higher capacity PneuTorque® models. These models deliver an ideal balance between robustness, speed and weight.

11	PTM-92 SERIES - STALL TOOLS - BI-DIRECTIONAL
18106.B08	1" sq. dr. 540 - 2700 N·m, 400 - 2000 lbf·ft
18119.B08	1" sq. dr. 800 - 4000 N·m, 590 - 2950 lbf·ft
18119.B12	1½" sq. dr. 800 - 4000 N·m, 590 - 2950 lbf·ft

Also available as forward only tools, replace B with F when ordering.
Stall tools are supplied in a carry case.

11	PTM-119 SERIES - STALL TOOLS - BI-DIRECTIONAL
18108.B12	1½" sq. dr. 900 - 4500 N·m, 660 - 3300 lbf·ft
18109.B12	1½" sq. dr. 1200 - 6000 N·m, 885 - 4425 lbf·ft

Also available as forward only tools, replace B with F when ordering.
Stall tools are supplied in a carry case.

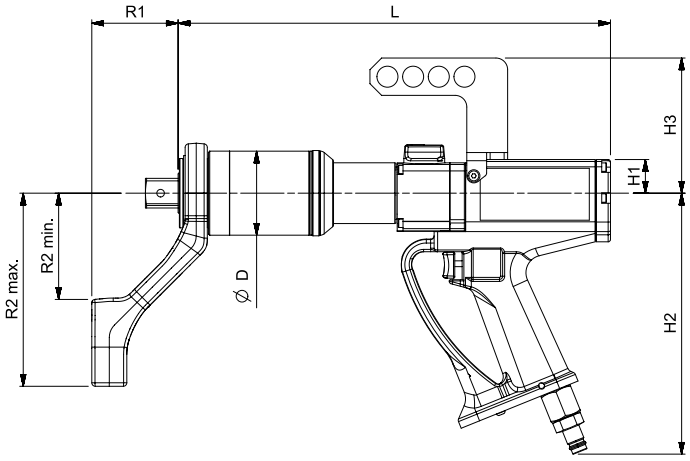

Model		PTM-52-500-B PTM-52-800-B	PTM-72-1000-B PTM-72-1350-B	PTM-72-2000-B	PTM-92-2700-B PTM-92-4000-B	PTM-119-4500-B PTM-119-6000-B
Part Number/s		18100.B06 18101.B06	18102.B06 18103.B08	18104.B08	18106.B08 18119.B08 18119.B12	18108.B12 18109.B12
Output Speed (rpm)		224 (PTM-52-500-B) 148 (PTM-52-800-B)	122 (PTM-72-1000-B) 86 (PTM-72-1350-B)	58	46 (PTM-92-2700-B) 32 (PTM-92-4000-B)	23 (PTM-119-4500-B) 15.5 (PTM-119-6000-B)
Dimensions (mm)	ØD	52	72	72	92	119
	H1	29	29	29	29	29
	H2	224	224	224	224	224
	H3	116	116	116	116	116
	L	310	342	371	394	415
	R1	59	68	74	87	118
	R2 min.	71	91	91	115	150
	R2 max.	131	165	165	205	199
Tool Weight (kg)		4.1	6.1	6.5	8.5	13.3
Reaction Weight (kg)		0.85	0.7	0.7	1.35	2.2

PNEUTORQUE® PTME-72 SERIES

11	PTME-72 SERIES - STALL TOOLS - BI-DIRECTIONAL*
18140.B06	¾" sq. dr. 200 - 1000 N·m, 147 - 738 lbf·ft
18149.B08	1" sq. dr. 200 - 1000 N·m, 147 - 738 lbf·ft
18141.B08	1" sq. dr. 400 - 2000 N·m, 295 - 1475 lbf·ft

*Comes supplied in a carry case.

Stall tools are also available as forward only tools, replace B with F when ordering.

11	PTME-72 SERIES - SHUT-OFF TOOLS - BI-DIRECTIONAL - INTERNAL	
18142.B06	¾" sq. dr. 200 - 1000 N·m, 147 - 738 lbf·ft	(IC)
18143.B08	1" sq. dr. 400 - 2000 N·m, 295 - 1475 lbf·ft	(IC)

11	PTME-72 SERIES - SHUT-OFF TOOLS - BI-DIRECTIONAL - EXTERNAL (Requires Tool Controller, see page 75)	
18144.B06	¾" sq. dr. 200 - 1000 N·m, 147 - 738 lbf·ft	(EC)
18145.B08	1" sq. dr. 400 - 2000 N·m, 295 - 1475 lbf·ft	(EC)

Designed to meet the needs of the commercial vehicle market, the integrated reaction foot of the PTME-72 series of tools reaches recessed wheel bolts whilst the 72mm diameter gearbox handles the high frequency of use demanded by busy tyre shops.

- IC and EC tools have an accuracy of ±2%

Model		PTME-72-1000-B	PTME-72-2000-B
Part Number/s		18140.B06 18149.B08	18141.B08
Output Speed (rpm)		122	58
Dimensions (mm)	ØD	72	72
	H1	29	29
	H2	224	224
	H3	116	116
	L	403	458
	R1	81	49
	R2 min.	63	63
	R2 max.	110	115
Tool Weight (kg)		7.2	7.7

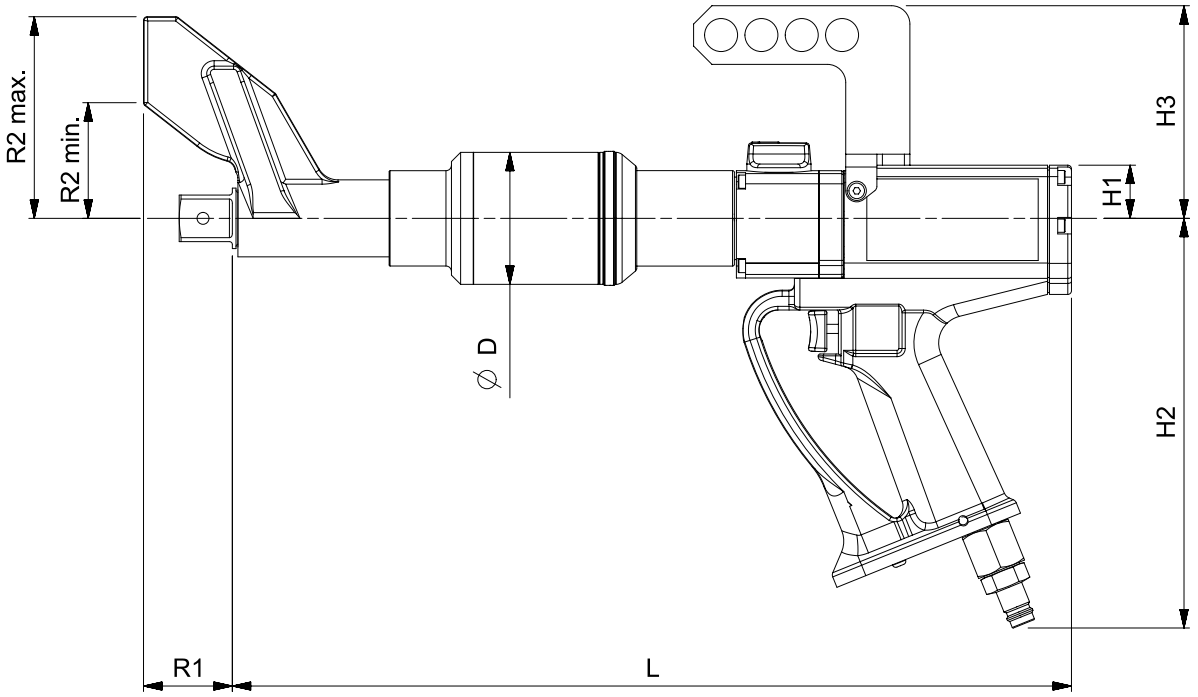

ET, ET2, PTS™ AND PTM NOSE EXTENSIONS

Special nose extension reaction devices are available for use in situations where the tool access is restricted. A typical application is the rear wheel nuts on heavy vehicles.

11	NOSE EXTENSIONS FOR 52 SERIES
18601.006	6" long, F/M ¾" sq. dr.
18601.009	9" long, F/M ¾" sq. dr.
18601.012	12" long, F/M ¾" sq. dr.

11	NOSE EXTENSIONS FOR 72 SERIES
19007.006	6" long, SPM/M 1" sq. dr.
19007.009	9" long, SPM/M 1" sq. dr.
19007.012	12" long, SPM/M 1" sq. dr.
18755.006	6" long SPM/M 1" sq. dr. for pre May 2009 PTM-72
18755.009	9" long SPM/M 1" sq. dr. for pre May 2009 PTM-72
18755.012	12" long SPM/M 1" sq. dr. for pre May 2009 PTM-72

SPM/M = Spline Male/Male Square

11	SPLINED NOSE EXTENSIONS FOR 52 SERIES
19045.006	6" long
19045.009	9" long
19045.012	12" long

11	SPLINED NOSE EXTENSIONS FOR 72 SERIES ¾" DRIVE
19046.006	6" long, ¾" sq.dr.
19046.009	9" long, ¾" sq.dr.
19046.012	12" long, ¾" sq.dr.

11	SPLINED NOSE EXTENSIONS FOR 72/92 SERIES 1" DRIVE
19285.006	ET/ET2/PTS™/PTM-72 6" long, 1" sq.dr.
19285.009	ET/ET2/PTS™/PTM-72 9" long, 1" sq.dr.
19285.012	ET/ET2/PTS™/PTM-72 12" long, 1" sq.dr.
19047.006	ET/ET2/PTS™/PTM-92 6" long, 1" sq.dr.
19047.009	ET/ET2/PTS™/PTM-92 9" long, 1" sq.dr.
19047.012	ET/ET2/PTS™/PTM-92 12" long, 1" sq.dr.

The TrukTorque™ nose extension features a special curved reaction arm designed to handle bolt tightening on the front and rear wheels of trucks and buses. The design easily accommodates wheel trims and deeply recessed wheel bolts.

11	NOSE EXTENSIONS FOR TRUCK AND BUS WHEELS (Fits PTM-72)
19087.009	1000 N·m, 9" long, ¾" sq. dr
19087.012	1000 N·m, 12" long, ¾" sq. dr
19089.009	1000 N·m, 9" long, 1" sq. dr
19089.012	1000 N·m, 12" long, 1" sq. dr

OPTIONAL REACTION PLATES

A variety of steel reaction plates and adaptors, together with ancillary feet, blades and heads to aid their use are available for HandTorque® , EvoTorque® and PneuTorque®.

11	FOR HT/PTS™/PTM-52 SERIES
18590	Double Sided Reaction Plate
18576	Straight Reaction Plate
18558	Reaction Adaptor
19186	Spline Adaptor from 52mm to 72mm
62236	Reaction Plate Spline Adaptor

Reaction Adaptors (18290 & 18558)

11	FOR HT/ET/PTS™/PTM-72 SERIES
18293	Double Sided Reaction Plate
18292	Straight Reaction Plate
18290	Reaction Adaptor

Reaction Adaptor (18290)
Double Sided Reaction Plate (18293)
Straight Reaction Plate (18292)

11	FOR ET/PTS™/PTM-92 SERIES
18979	Straight Reaction Plate
18980	Double Sided Straight Reaction Plate

11	FOR ET/PTM-119 SERIES
16687	Straight Reaction Plate
18981	Double Sided Straight Reaction Plate

Straight Reaction with Peg (18298)
Short Reaction Foot (18241)
Straight Reaction (18291)

11	ANCILLARY ITEMS FOR USE WITH 18290 OR 18558
18298	Straight Reaction with Peg
18291	Straight Reaction
18241	Short Reaction Foot
18358	Sliding Reaction Blade (to be used with 18291)
18359	Sliding Reaction Spigot Head (to be used with 18291)

Reaction Weld Ring

11	REACTION WELD RINGS
18694	For HT/PTS/PTM-52
18695	For HT/ET/PTS/PTM-72
18696	For HT/ET/PTS/PTM-92
18697	For HT/ET/PTS/PTM-119

Light Weight Reaction (19214)

11	LIGHT WEIGHT REACTIONS
19214	PT/PTS™/PTM-72 API Class 4 Light Weight Reaction

11	SLIDING REACTIONS
180300.052.B06	52mm Ø Sliding Reaction ¾" SQ.
180300.072.B06	72mm Ø Sliding Reaction ¾" SQ.
180300.072.B08	72mm Ø Sliding Reaction 1" SQ.
180300.092.B08	92mm Ø Sliding Reaction 1" SQ.
180300.092.B12	92mm Ø Sliding Reaction 1 ½" SQ.
180300.119.B12	119mm Ø Sliding Reaction 1 ½" SQ.

Sliding Reaction (180300.092.B08)

Reaction Adaptor (18290) with Straight Reaction with Peg (18298)

OPTIONAL REACTION PLATES

A variety of reaction plates, manufactured in Steel or Aluminium, for EvoTorque®, HandTorque® and PneuTorque®.
Norbar also offer a range of specific reactions for the Wind Industry.

11	SPLINED REACTION FOR ET/HT/PTS™/PTM-72 SERIES
19289	Steel Cranked Reaction for 72mm
18494	Aluminium Cranked Reaction for 72mm

Above:
Steel Splined Reaction
Part No. 19289

Below:
Aluminium Splined Reaction
Part No. 18494

11	SPLINED REACTION FOR ET/HT/PTS™/PTM-92 SERIES
19291	Steel Cranked Reaction for 92mm
18936	Aluminium Cranked Reaction for 92mm

Above:
Steel Splined Reaction
Part No. 19291

Below:
Aluminium Splined Reaction
Part No. 18936

11	SPLINED REACTION FOR ET/HT/PTS™/PTM-119 SERIES
19293	Steel Cranked Reaction for 119mm (7000 N·m)
18961	Aluminium Cranked Reaction for 119mm

Above:
Steel Splined Reaction
Part No. 19293

Below:
Aluminium Splined Reaction
Part No. 18961

	A	B	C
19289	114mm	100mm	167mm
18494	91mm	99mm	166mm
19291	115mm	105mm	175mm
18936	115mm	124mm	205mm
19293	150mm	128mm	210mm
18961	132mm	157mm	199mm

11	SPECIAL SPLINED REACTION FOR ET/HT/PTS™/PTM-92 SERIES
78028	Steel Cranked Reaction for 92mm

Typical Wind Tower mid-section reaction
Part No. 78028

11	SPECIAL SPLINED REACTION FOR ET/HT/PTS™/PTM-119 SERIES
78027	Steel Cranked Reaction for 119mm

Typical Wind Tower mid-section reaction
Part No. 78027

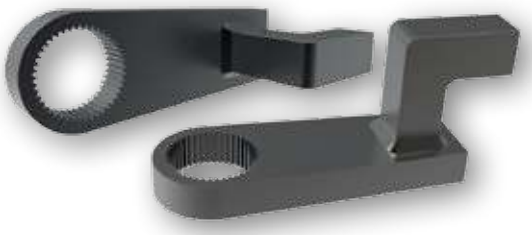

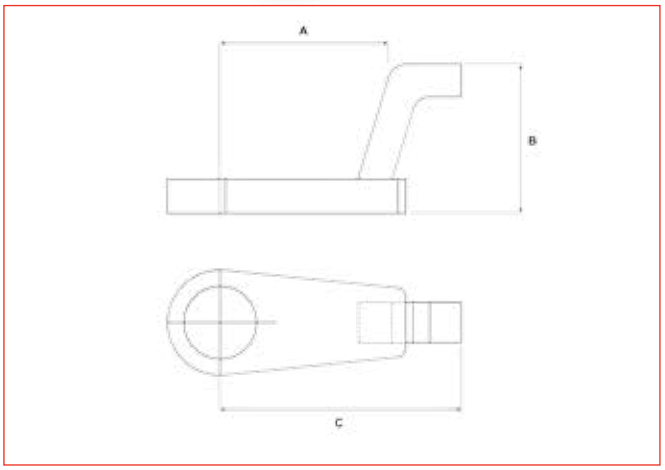

	A	B	C
78028	57mm	115mm	145mm
78027	150mm	130mm	250mm

PTS™ & PTM DUAL TRIGGER

Dual Trigger Module (19286)

A secondary trigger for use with all PTS™ and PTM tools that easily attaches between the tool's air inlet port and hose. This requires the operator to use both hands to run the tool and so reduces the risk of hands getting trapped between the reaction bar and reaction point.

- Inlet ½" BSPP Female
- Outlet ½" BSPP Male

11	DUAL TRIGGER MODULE
19286	Dual Trigger Module for use with any PneuTorque®

To order a pre-assembled tool add the suffix .DTM onto the end of the part number.

NOTE: When fitting a DTM the torque tool must be recalibrated with the DTM in place

SECONDARY HANDLE

The secondary handle is an easy to fit and versatile accessory which offers additional support and ease of handling when applying torque with Norbar's powered tools. The secondary handle is designed to fit directly to all new powered tools which have a handle location groove in the annulus which is covered by a red rubber band (see inset image to the right).

11	SECONDARY HANDLE
19363	For use with ET/ET2/PTS™/PTM 72, 92 & 119 Series
19448	For use with ET/ET2/PTS™/PTM 80 Series

Not suitable for use with PTS™/PTM 52 Series

RIGHT ANGLE GEARBOX

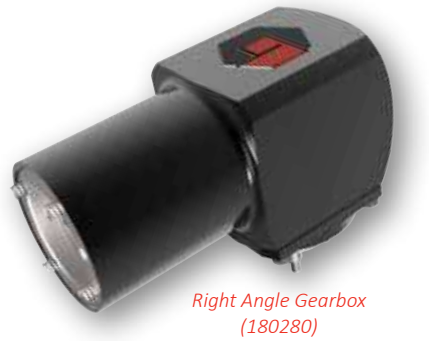

Right Angle Gearbox (180280)

11	RIGHT ANGLE GEARBOX
180280	¾" sq. dr. 100 - 500 N·m, 74 - 370 lbf·ft

To order a pre-assembled tool add the suffix .RA onto the end of the part number.

The EvoTorque®2 can also be supplied in a Peli Case pre-assembled to a Right Angle Gearbox at an additional charge. Please add .RAPEL onto the end of the EvoTorque®2 part number.

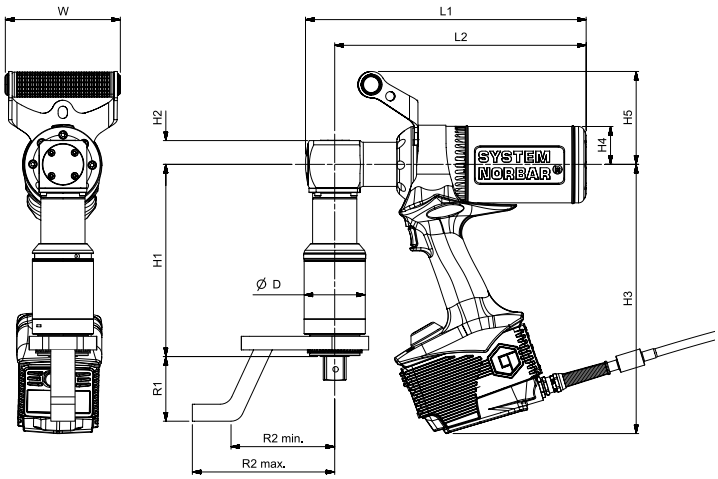

The Right Angle Gearbox Adaptor will provide most ET, PTS™ and PTM tools with a 90° angle of operation, enabling the benefits of Norbar's pneumatic and electric torque tools to be brought to a host of applications from which they are currently excluded due to space restrictions.

- Allows Norbar PTM, PTS™ and EvoTorque® tools to be used for many applications with restricted access
- Allows more comfortable operation of these tools on vertical bolting applications at chest height and above as the pistol grip is presented correctly to the operator
- The tool handle can rotate 360° in relation to the Right Angle Gearbox allowing the most comfortable and safest position to be found
- The handle and Right Angle Gearbox can index in relation to the tool gearbox meaning that reaction forces are not passed back to the operator
- Manufactured from steel, the Right Angle Gearbox is robustly constructed for durability and long life
- The Right Angle Gearbox can be purchased as a stand-alone product and retrofitted to existing Norbar tools by suitably qualified technicians. Norbar recommend tool recalibration after a Right Angle Gearbox has been fitted but where this is not possible, an efficiency of 97% can be assumed

Right Angle Gearbox fitted to EvoTorque®2

Model		ET-72-1000 ET-72-1350	ET-72-2000	ET-92-2700 ET-92-4000	ET-119-6000 ET-119-7000
Part Number/s		180230.B06.RA 180220.B06.RA 180231.B06.RA 180221.B06.RA	180232.B08.RA 180222.B08.RA	180233.B08.RA 180223.B08.RA 180234.B08.RA 180224.B08.RA	180235.B12.RA 180225.B12.RA 180236.B12.RA 180226.B12.RA
Output Speed (rpm)		21 (ET-72-1000) 17 (ET-72-1350)	11	8.5 (ET-92-2700) 6 (ET-92-4000)	3.3
Dimensions (mm)	ØD	72	72	92	119
	H1	198	226	250	272
	H2	28	28	28	28
	H3	317	317	317	317
	H4	45	45	45	45
	H5	109	109	109	109
	L1	331	331	331	331
	L2	296	296	296	296
	R1	71	76	70	90
	R2 min.	124	124	125	162
	R2 max.	167	167	175	210
	W	136	136	136	136
Tool Weight (kg)		12.56	12.96	15.01	18.96
Reaction Weight (kg)		1.5	1.5	2.6	3.9

RIGHT ANGLE GEARBOX

Model		PTS™-52-500 PTS™-52-800	PTS™-72-1000 PTS™-72-1350	PTS™-72-2000	PTS™-80-2700	PTS™-92-4000	PTS™-119-7000
Part Number/s		180241.B06.RA 180242.B06.RA	180243.B06.RA 180244.B08.RA	180245.B08.RA	180246.B08.RA	180247.B08.RA 180247.B12.RA	180248.B12.RA
Output Speed (rpm)		35.5 (PTS™-52-500) 25.7 (PTS™-52-800)	20.4 (PTS™-72-1000) 14.7 (PTS™-72-1350)	9.2	7.3	5.3	2.6
Dimensions (mm)	ØD	52	72	72	80	92	119
	H1	166	198	226	250	250	272
	H2	28	28	28	28	28	28
	H3	243	243	243	243	243	243
	H4	30	30	30	30	30	30
	L1	260	260	260	260	260	260
	L2	225	225	225	225	225	225
	R1	59	76	76	76	70	90
	R2 min.	71	124	124	124	125	162
	R2 max.	131	167	167	167	175	210
	W	69	69	69	69	69	69
Tool Weight (kg)		6.36	8.4	8.76	8.31	11.11	14.68
Reaction Weight (kg)		0.85	1.4	1.4	1.4	2.5	3.8

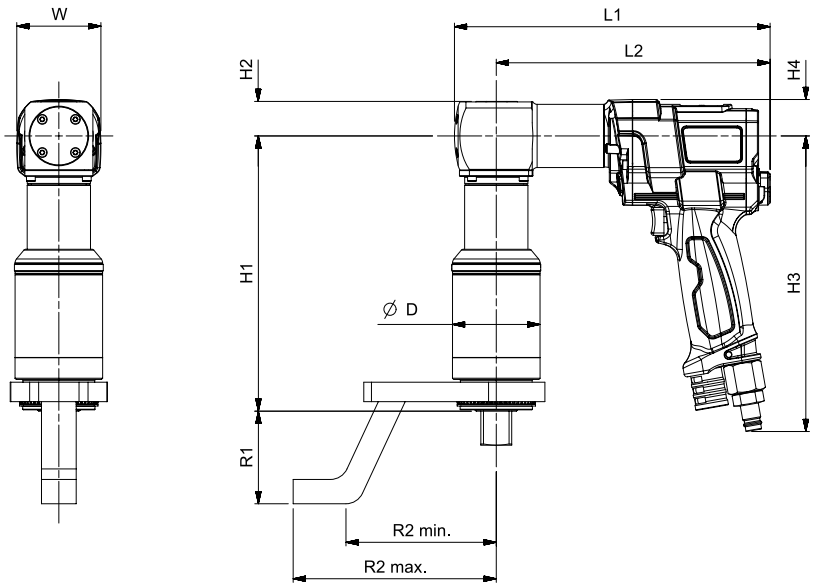

Right Angle Gearbox fitted to PTS™

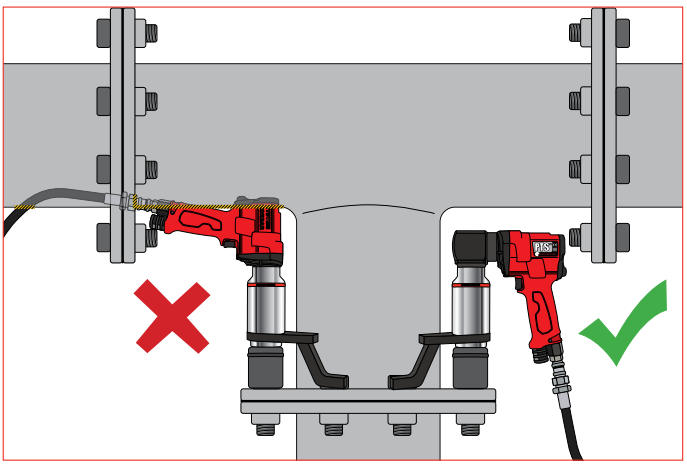

RIGHT ANGLE GEARBOX

Model		PTM-52-500-B PTM-52-800-B	PTM-72-1000-B PTM-72-1350-B	PTM-72-2000-B	PTM-92-2700-B PTM-92-4000-B	PTM-119-4500-B PTM-119-6000-B
Part Number/s		18100.B06.RA 18101.B06.RA	18102.B06.RA 18103.B08.RA	18104.B08.RA	18106.B08.RA 18119.B08.RA 18119.B12.RA	18108.B12.RA 18109.B12.RA
Output Speed (rpm)		224 (PTM-52-500-B) 148 (PTM-52-800-B)	122 (PTM-72-1000-B) 86 (PTM-72-1350-B)	58	46 (PTM-92-2700-B) 32 (PTM-92-4000-B)	23 (PTM-119-4500-B) 15.5 (PTM-119-6000-B)
Dimensions (mm)	ØD	52	72	72	92	119
	H1	166	198	226	250	272
	H2	28	28	28	28	28
	H3	224	224	224	224	224
	H4	29	29	29	29	29
	H5	116	116	116	116	116
	L1	307	307	307	307	307
	L2	272	272	272	272	272
	R1	59	74	74	87	119
	R2 min.	71	91	91	124	149
	R2 max.	131	166	166	205	199
	W	82	82	82	82	82
Tool Weight (kg)		6.26	8.26	8.66	10.66	15.36
Reaction Weight (kg)		0.85	0.7	0.7	1.35	2.2

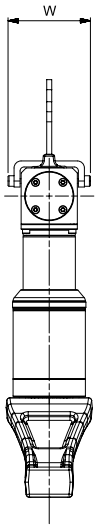

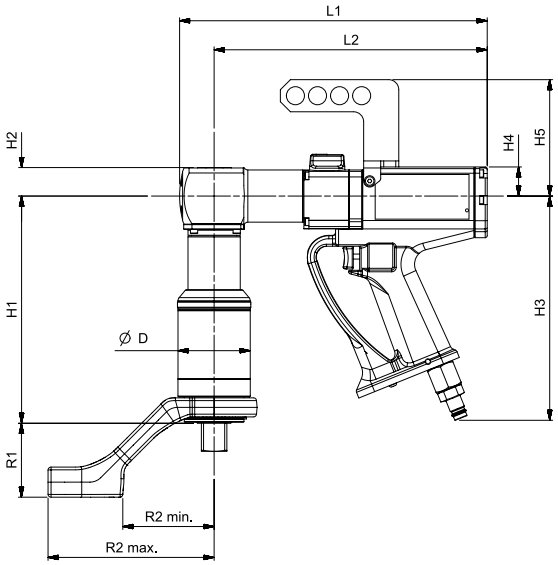

Right Angle Gearbox fitted to PTM

PNEUTORQUE® STANDARD SERIES

Based on the original PneuTorque®, the 'Standard Series' range is a direct result of over 50 years of refinement and development necessary to keep pace with the requirements of industry today.

In use in many thousands of applications worldwide PneuTorque® wrenches continue to represent the foundation of Norbar's powered tool range. Two speed models offer all the advantages of single speed versions but with the additional benefit of a run-down speed five times greater than the high torque speed setting.

- Models available for almost every bolting and torque application, up to 300,000 N·m
- Forward and reverse operation
- Quiet, non-impacting or pulsing operation - low operator fatigue
- Stall control gives repeatability of ±5% on a given joint
- Other reaction styles can be designed to suit specific applications
- Electronic torque transducers can be fitted for precise torque monitoring

11	TO 100000 N·m - SINGLE SPEED
16031	PT 1 ¾" sq. dr. 160-680 N·m, 120-500 lbf·ft
16011	PT 1 1" sq. dr. 160-680 N·m, 120-500 lbf·ft
16098	PT 1A ¾" sq. dr. 270-1200 N·m, 200-900 lbf·ft
16097	PT 1A 1" sq. dr. 270-1200 N·m, 200-900 lbf·ft
16013	PT 2 1" sq. dr. 515-1700 N·m, 380-1250 lbf·ft
16015	PT 5 1" sq. dr. 880-3400 N·m, 650-2500 lbf·ft
16017	PT 6 1½" sq. dr. 880-3400 N·m, 650-2500 lbf·ft
16066	PT 7 1½" sq. dr. 1762-6000 N·m, 1300-4500 lbf·ft
16072	PT 9 1½" sq. dr. 2710-9500 N·m, 2000-7000 lbf·ft
16046	PT 11 2½" sq. dr. 4400-20000 N·m, 3250-14700 lbf·ft
18086	PT 12 2½" sq. dr. 9500-34000 N·m, 7000-25000 lbf·ft
16052	PT 13 2½" sq. dr. 13550-47000 N·m, 10000-35000 lbf·ft
16045	PT 14 3½" sq. dr. 22375-100000 N·m, 16500-73500 lbf·ft

11	TO 9500 N·m - AUTOMATIC TWO SPEED
16031.AUT	PT 1 ¾" sq. dr. Auto 2SP 160-680 N·m, 120-500 lbf·ft
16011.AUT	PT 1 1" sq. dr. Auto 2SP 160-680 N·m, 120-500 lbf·ft
16098.AUT	PT 1A ¾" sq. dr. Auto 2SP 400-1200 N·m, 295-900 lbf·ft
16097.AUT	PT 1A 1" sq. dr. Auto 2SP 400-1200 N·m, 295-900 lbf·ft
16013.AUT	PT 2 1" sq. dr. Auto 2SP 700-1700 N·m, 516-1250 lbf·ft
16015.AUT	PT 5 1" sq. dr. Auto 2SP 880-3400 N·m, 650-2500 lbf·ft
16017.AUT	PT 6 1½" sq. dr. Auto 2SP 880-3400 N·m, 650-2500 lbf·ft
16066.AUT	PT 7 1½" sq. dr. Auto 2SP 2200-6000 N·m, 1622-4500 lbf·ft
16072.AUT	PT 9 1½" sq. dr. Auto 2SP 2100-9500 N·m, 2286-7000 lbf·ft

MTS = Manual Two Speed. Auto 2SP = Automatic Two Speed.
Angle Encoders are available for standard series PTs please contact Norbar for further details.
NB: PneuTorque® PT 11 - PT 18 are supplied with a Lubro Control Unit as standard equipment. PneuTorques PT 12, 13 and 14 are also supplied with a weld prepared reaction ring as standard. PTs 13 and 14 are also supplied with a transporting trolley. PTs 15 - 18 do not include output drive or reaction. These components will be engineered uniquely for each application. Remote PT part numbers are designated with an .X
e.g. PT 1 Remote is 16031.X
e.g. PT 1 Remote Auto is 16031.XAUT

11	TO 300000 N·m - MANUAL TWO SPEED
16031.MTS	PT 1 ¾" sq. dr. MTS 160-680 N·m, 120-500 lbf·ft
16011.MTS	PT 1 1" sq. dr. MTS 160-680 N·m, 120-500 lbf·ft
16098.MTS	PT 1A ¾" sq. dr. MTS 270-1200 N·m, 200-900 lbf·ft
16097.MTS	PT 1A 1" sq. dr. MTS 270-1200 N·m, 200-900 lbf·ft
16013.MTS	PT 2 1" sq. dr. MTS 515-1700 N·m, 380-1250 lbf·ft
16015.MTS	PT 5 1" sq. dr. MTS 880-3400 N·m, 650-2500 lbf·ft
16017.MTS	PT 6 1½" sq. dr. MTS 880-3400 N·m, 650-2500 lbf·ft
16066.MTS	PT 7 1½" sq. dr. 1762-6000 N·m, 1300-4500 lbf·ft
16072.MTS	PT 9 1½" sq. dr. 2710-9500 N·m, 2000-7000 lbf·ft
16046.MTS	PT 11 2½" sq. dr. 4400-20000 N·m, 3250-14700 lbf·ft
18086.MTS	PT 12 2½" sq. dr. 9500-34000 N·m, 7000-25000 lbf·ft
16052.MTS	PT 13 2½" sq. dr. 13550-47000 N·m, 10000-35000 lbf·ft
16045.MTS	PT 14 3½" sq. dr. 22375-100000 N·m, 16500-73500 lbf·ft
18089.MTS	PT 15 MTS 40000-150000 N·m, 29500-110500 lbf·ft
18090.MTS	PT 16 MTS 55000-200000 N·m, 40500-147500 lbf·ft
18088.MTS	PT 17 MTS 70000-250000 N·m, 51500-184500 lbf·ft
16054.MTS	PT 18 MTS 85000-300000 N·m, 62500- 221500 lbf·ft
16490	Lifting Bracket for Standard Series (up to PT7)

PT 18 fitted with Annular Transducer
(Transducer not included)

PNEUTORQUE® STANDARD SERIES

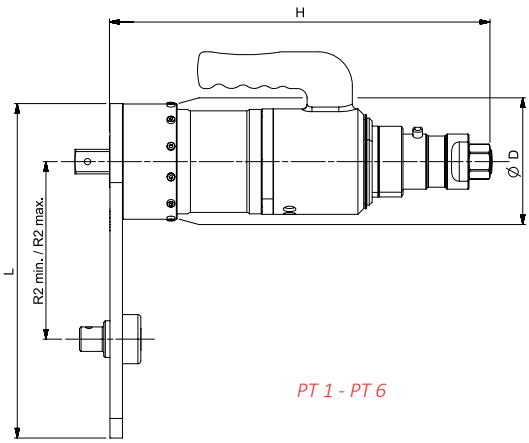

PT 1 - PT 6

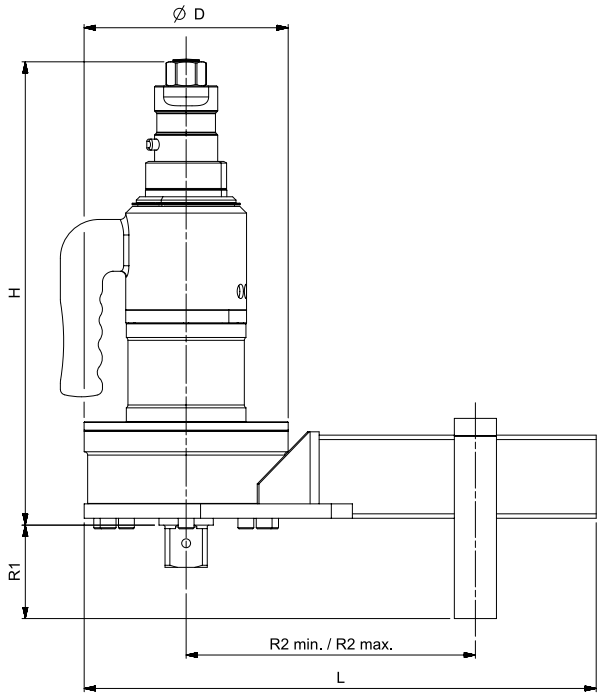

PT 7 - PT 11

PneuTorque® Standard Series Automatic Two Speed

Model		PT 1	PT 1A	PT 2	PT 5	PT 6	PT 7	PT 9
Part Number/s		16031.AUT 16011.AUT	16098.AUT 16097.AUT	16013.AUT	16015.AUT	16017.AUT	16066.AUT	16072.AUT
Output Speed (rpm)		150	75	45	25	25	12.5	9
Dimensions (mm)	ØD	108	108	108	119	119	144	184
	H	419	419	419	462	464	492	487
	L	303	303	303	355	355	423	448
	R1	N/A	N/A	N/A	N/A	N/A	84	84
	R2 min.	83	83	83	86	86	150	175
	R2 max.	216	216	216	263	263	331	351
Tool Weight (kg)		14.1	14.6	14.6	17.5	17.5	23.2	27.9
Reaction Weight (kg)		2.2	2.2	2.2	2.5	2.5	6.3	8.3

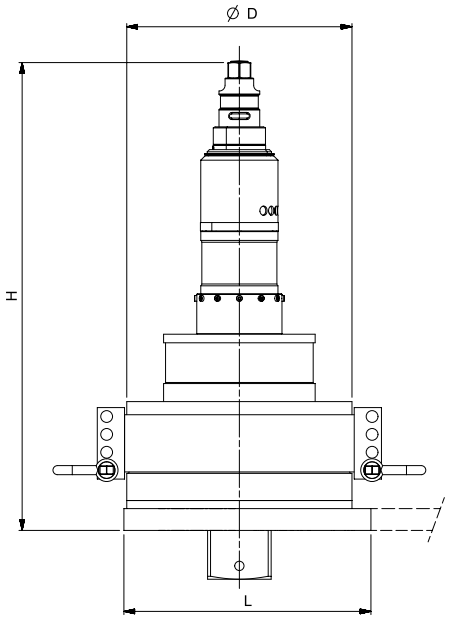

PT 12 - PT 18

PneuTorque® Standard Series Single Speed

Model		PT 1	PT 1A	PT 2	PT 5	PT 6	PT 7	PT 9	PT 11	PT 12	PT 13	PT 14
Part Number/s		16031 16011	16098 16097	16013	16015	16017	16066	16072	16046	18086	16052	16045
Output Speed (rpm)		30	15	9	5	5	2.5	1.8	1.2	0.5	0.3	0.2
Dimensions (mm)	ØD	108	108	108	119	119	144	184	212	248	315	315
	H	350	350	350	393	395	423	418	495	536	578	643
	L	303	303	303	355	355	423	448	609	325	341	341
	R1	N/A	N/A	N/A	N/A	N/A	84	84	N/A	N/A	N/A	N/A
	R2 min.	83	83	83	86	86	150	175	320	N/A	N/A	N/A
	R2 max.	216	216	216	263	263	331	351	500	N/A	N/A	N/A
Tool Weight (kg)		10.6	11.1	11.1	14	14	19.7	24.4	38.6	49.8	102.2	119.4
Reaction Weight (kg)		2.2	2.2	2.2	2.5	2.5	6.3	8.3	13.3	6.5	6.9	10.4

PneuTorque® Standard Series Manual Two Speed

Model		PT 1	PT 1A	PT 2	PT 5	PT 6	PT 7	PT 9	PT 11	PT 12	PT 13	PT 14	PT 15	PT 16	PT 17	PT 18
Part Number/s		16031.MTS 16011.MTS	16098.MTS 16097.MTS	16013.MTS	16015.MTS	16017.MTS	16066.MTS	16072.MTS	16046.MTS	18086.MTS	16052.MTS	16045.MTS	18089.MTS	18090.MTS	18088.MTS	16054.MTS
Output Speed (rpm)		150	75	45	25	25	12.5	9	6	2.5	1.5	1	0.5	0.4	0.35	0.3
Dimensions (mm)	ØD	108	108	108	119	119	144	184	212	248	315	315	*	410	410	520
	H	436	436	436	479	481	509	504	581	622	664	729	*	866	939	936
	L	303	303	303	355	355	423	448	609	325	341	341	*	N/A	N/A	N/A
	R1	N/A	N/A	N/A	N/A	N/A	84	84	N/A	N/A	N/A	N/A	N/A	N/A	N/A	N/A
	R2 min.	83	83	83	86	86	150	175	320	N/A	N/A	N/A	N/A	N/A	N/A	N/A
	R2 max.	216	216	216	263	263	331	351	500	N/A	N/A	N/A	N/A	N/A	N/A	N/A
Tool Weight (kg)		14.1	14.6	14.6	17.5	17.5	23.2	27.9	42.1	53.3	105.7	122.9	*	270	285	380
Reaction Weight (kg)		2.2	2.2	2.2	2.5	2.5	6.3	8.3	13.3	6.5	6.9	10.4	N/A	N/A	N/A	N/A

* Available on request

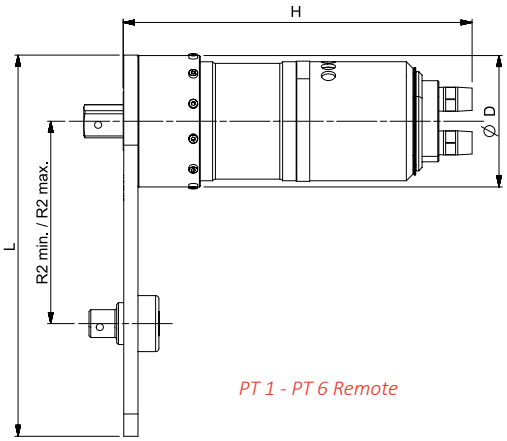

PT 1 - PT 6 Remote

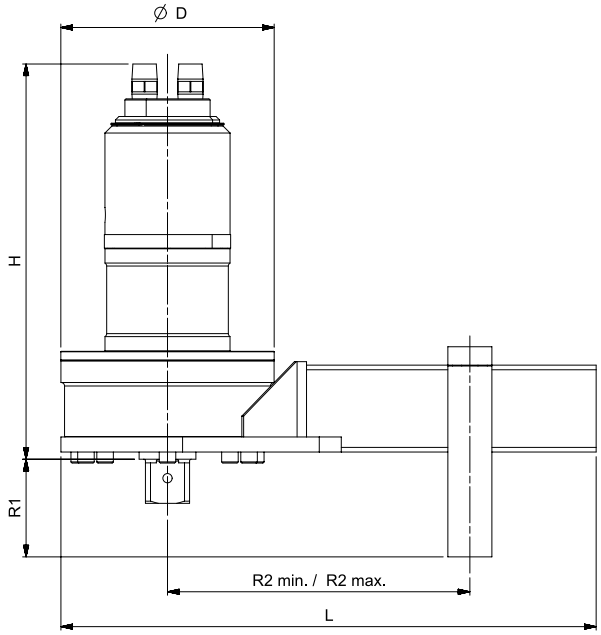

PT 7 - PT 11 Remote

PneuTorque® Standard Series Automatic Two Speed - Remote

Model		PT 1	PT 1A	PT 2	PT 5	PT 6	PT 7	PT 9
Part Number/s		16031.XAUT 16011.XAUT	16098.XAUT 16097.XAUT	16013.XAUT	16015.XAUT	16017.XAUT	16066.XAUT	16072.XAUT
Output Speed (rpm)		150	75	45	25	25	12.5	9
Dimensions (mm)	ØD	108	108	108	119	119	144	184
	H	339	339	339	382	383	412	407
	L	303	303	303	355	355	423	448
	R1	N/A	N/A	N/A	N/A	N/A	84	84
	R2 min.	83	83	83	86	86	150	175
	R2 max.	216	216	216	263	263	331	351
Tool Weight (kg)		14.1	14.6	14.6	17.5	17.5	23.2	27.9
Reaction Weight (kg)		2.2	2.2	2.2	2.5	2.5	6.3	8.3

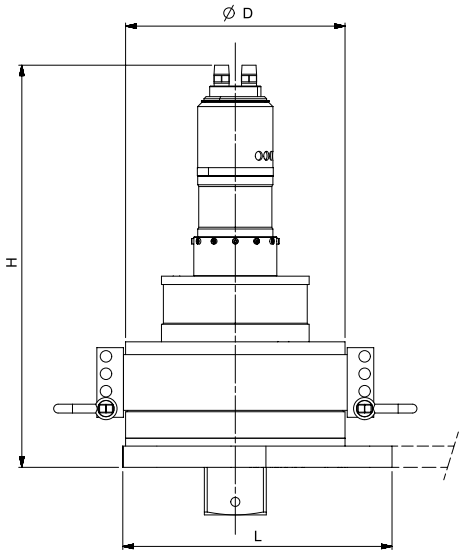

PT 12 - PT 18 Remote

PneuTorque® Standard Series Single Speed - Remote

Model		PT 1	PT 1A	PT 2	PT 5	PT 6	PT 7	PT 9	PT 11	PT 12	PT 13	PT 14
Part Number/s		16031.X 16011.X	16098.X 16097.X	16013.X	16015.X	16017.X	16066.X	16072.X	16046.X	18086.X	16052.X	16045.X
Output Speed (rpm)		30	15	9	5	5	2.5	1.8	1.2	0.5	0.3	0.2
Dimensions (mm)	ØD	108	108	108	119	119	144	184	212	248	315	315
	H	270	270	270	313	314	343	340	415	456	490	563
	L	303	303	303	355	355	423	448	609	325	341	341
	R1	N/A	N/A	N/A	N/A	N/A	84	84	N/A	N/A	N/A	N/A
	R2 min.	83	83	83	86	86	150	175	320	N/A	N/A	N/A
	R2 max.	216	216	216	263	263	331	351	500	N/A	N/A	N/A
Tool Weight (kg)		10.6	11.1	11.1	14	14	17.9	24.4	38.6	49.8	102.2	119.4
Reaction Weight (kg)		2.2	2.2	2.2	2.5	2.5	6.3	8.3	13.3	6.5	6.9	10.4

PneuTorque® Standard Series Manual Two Speed - Remote

Model		PT 1	PT 1A	PT 2	PT 5	PT 6	PT 7	PT 9	PT 11	PT 12	PT 13	PT 14	PT 15	PT 16	PT 17	PT 18
Part Number/s		16031.XMTS 16011.XMTS	16098.XMTS 16097.XMTS	16013.XMTS	16015.XMTS	16017.XMTS	16066.XMTS	16072.XMTS	16046.XMTS	18086.XMTS	16052.XMTS	16045.XMTS	18089.XMTS	18090.XMTS	18088.XMTS	16054.XMTS
Output Speed (rpm)		150	75	45	25	25	12.5	9	6	2.5	1.5	1	0.5	0.4	0.35	0.3
Dimensions (mm)	ØD	108	108	108	119	119	144	184	212	248	315	315	*	410	410	520
	H	356	356	356	399	400	429	425	501	542	576	649	*	786	859	856
	L	303	303	303	355	355	423	448	609	325	341	341	*	N/A	N/A	N/A
	R1	N/A	N/A	N/A	N/A	N/A	84	84	N/A	N/A	N/A	N/A	N/A	N/A	N/A	N/A
	R2 min.	83	83	83	86	86	150	175	320	N/A	N/A	N/A	N/A	N/A	N/A	N/A
	R2 max.	216	216	216	263	263	331	351	500	N/A	N/A	N/A	N/A	N/A	N/A	N/A
Tool Weight (kg)		14.1	14.6	14.6	17.5	17.5	23.2	27.9	42.1	53.3	105.7	122.9	*	270	285	380
Reaction Weight (kg)		2.2	2.2	2.2	2.5	2.5	6.3	8.3	13.3	6.5	6.9	10.4	N/A	N/A	N/A	N/A

* Available on request

PNEUTORQUE® STANDARD SERIES - OPTIONAL ACCESSORIES

11	NOSE EXTENSIONS FOR STANDARD SERIES GEARBOX
16480.006	PT1 & 2, 6" long, F/M ¾" sq. dr.
16480.009	PT1 & 2, 9" long, F/M ¾" sq. dr.
16480.012	PT1 & 2, 12" long, F/M ¾" sq. dr.
16542.006	PT1 & 2, 6" long, F/M 1" sq. dr.
16542.009	PT1 & 2, 9" long, F/M 1" sq. dr.
16542.012	PT1 & 2, 12" long, F/M 1" sq. dr.
16694.006	PT5 6" long, M/M 1" sq. dr.
16694.009	PT5 9" long, M/M 1" sq. dr.
16694.012	PT5 12" long, M/M 1" sq. dr.

The nose extensions shown above can also be used with HT2s and 5s.
If required other sizes of nose extension are available.
F/M = Female input square/male output square
M/M = Male input square/male output square

11	FOR HT30/PT2700
16686	Single Sided Straight Reaction Plate

Sliding Spigot Reaction Plate (18436)

11	FOR HT60/PT4500/PT5500
16687	Single Sided Straight Reaction Plate
18436	Sliding Spigot Reaction Plate

LUBRO CONTROL UNITS

16074

16075

60290

11	LUBRO CONTROL UNITS
16074	Lubro Control Unit F/W 3m hose
16075	Twin Lubro Control Unit
60290	Multi Channel Lubro

See Page 112 for Lubro Control Unit spares.

Norbar's standard filter, regulator, lubricator unit 16074 features a 100mm diameter gauge for easy and accurate setting of air pressure with ergonomic placement of air pressure adjustment control. It is supplied with 3 metres of robust, steel braded air hose with fittings to connect to PneuTorque® wrenches.

Twin Regulator Lubro Control Unit, part number 16075

The 'Twin Lubro' has the same features as Norbar's standard filter, regulator, lubricator unit but has the benefit of two regulators and a switch that allows quick selection between two air pressure settings. A typical application for this would be a PneuTorque® user wishing to quickly select between two applications requiring different torque settings. For example, this might be controlled torque in the forward direction and maximum torque allowed by the tool in the reverse direction.

Multi Channel Lubro, part number 60290

The Multi Channel Lubro is for users who wish to run their pneumatic tools at multiple air pressure settings, without having to make time consuming adjustments to an air regulator. The Multi Channel Lubro can be programmed for up to 15 air pressure settings and these settings can be locked by the removal of the programming key. A typical application would be a tyre shop servicing various vehicles, each vehicle having a different wheel nut torque. Settings can be recorded on a write-on label situated on the front of the Lubro Control. The Multi Channel Lubro is battery powered with a battery life of approximately 16 hours under normal use.

TOOL CONTROLLERS

The Tool Controller shut-off system is supplied in a wall box for 'External Control' versions of the Norbar PTM series of tools. This can give a much greater range of functionality than is possible on the 'Internal Control' version of the tool.

11	TOOL CONTROLLER (TTT based)
60244	Shut-off system in wall box
60254	Shut-off system in wall box with printer

Tool Controllers are supplied without leads

61127.600	Lead for PTM Series Tool
61126.600	Transducer Lead for PT Series Tool
61128.600	Solenoid Lead for PT Series Tool (for single valve)

Other lead lengths can be ordered at an additional cost.
Both 61126.600 and 61128.600 are required to control a PT Series tool with a tool controller.

Example of T-Box XL™ based Tool Controller
Part No. 60302

11	TOOL CONTROLLER (T-BOX XL™ based)
60302	Shut-off system in wall box for PTM tools

Tool Controllers are supplied without leads

61135.600	Transducer Lead for PTM-EC and Angle Series Tools
61135.1000	Transducer Lead for PTM-EC and Angle Series Tools

The models above are a sample of the controllers that Norbar produce.
Please contact Norbar for your special requirements.

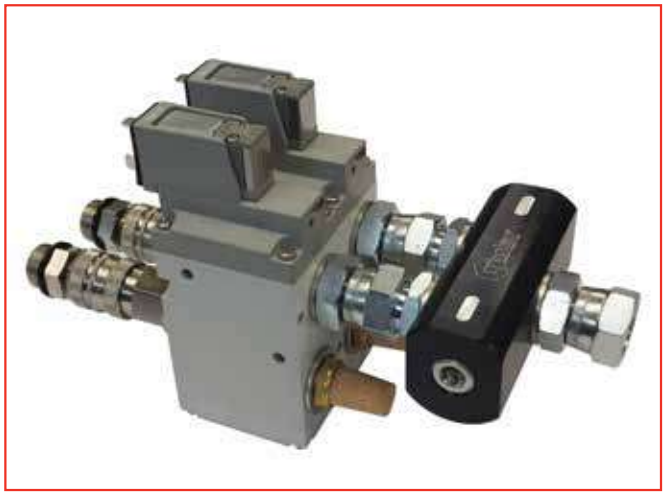

Example of Remote 108 Operating Valve Assembly
fitted to a 108 Remote Motor
Part No. 60309

This assembly includes two 3 way shut-off valves Part No. 28943

8	3 WAY SHUT-OFF VALVE
28943	3 Way Shut-off Valve 10 BAR Maximum Air Pressure

8	TWIN SOLENOID VALVE ASSEMBLY
60309	Twin Solenoid Valve Assembly for 108 Remote Tools
60310	Twin Solenoid Valve Assembly for 72 Remote Tools
60298.600*	Solenoid Lead for twin valve assembly
60298.1000*	Solenoid Lead for twin valve assembly

* For use with special tool controllers.

TORQUE MEASUREMENT

Norbar started manufacturing electronic torque measuring instruments in the early 1970s and now offers a comprehensive range, from the easy to use, cost effective TruCheck™ through to the sophisticated T-Box XL™ and TDMS software, which provides the complete solution for torque tool calibration, data logging and data management. Norbar's torque measuring instruments are renowned for high accuracy and superb reliability. Indeed, many of those early instruments are still in regular use today. For our interchangeable transducer instruments, we remain one of the few manufacturers in the world that issue a UKAS accredited calibration certificate both for the instrument and for the torque transducer. In doing so, customers can swap combinations of instrument and transducer while retaining complete traceability.

Norbar's torque transducers have established an excellent reputation based on exceptional quality and accuracy. A very wide torque range is covered, 0.04 N·m to 300,000 N·m and three basic transducer configurations are offered; Static, Impulse Rotary and Annular.

All transducers up to 100,000 N·m are supplied as standard with a UKAS accredited calibration certificate from Norbar's in-house laboratory.

For customers who wish to take advantage of Norbar's transducers but have an existing, non Norbar display instrument, transducers can be provided with a mV/V calibration.

Norbar's instruments and transducers are complemented by a wide range of ancillary products. Within this group are the products that would be required to set up a torque calibration laboratory, for example, torque wrench calibrators meeting ISO requirements and precision beam and weight systems for calibration of torque transducers.

Torque Measurement	77
Trucheck™ 0.1 N·m - 25 N·m	78
Trucheck™ 10 N·m - 2000 N·m	79
Pro-Test	80
TST	81
TTT	82
T-Box XL™	83
TDMS Software	83
Spares for Instrumentation Products	84
Part Number Suffix System	84
Transducers FMT	84
Static Transducers	85
Rotary Transducers	86
Annular Transducers	87
Transducer Leads	88
Torque Wrench Calibrator - Manual	89
Torque Wrench Calibrator - Ancillaries	90
ISO 3000 Loader	90
Torque Wrench Calibrator - Auto	91
Test Fixtures	93

TORQUE MEASUREMENT

Measurement and Calibration - Glossary of Terms

The following information may help in selecting the appropriate measuring device for your needs.

Accuracy

The precision of the instrument which can be reported in three ways.

1. By quoting the guaranteed tolerance as a percentage of the reading or indicated value (eg. “0.5% of Reading”).

2. By quoting the guaranteed tolerance as a percentage of the full scale value of the instrument (eg. 0.1% FS or 0.1% FSD).

3. By quoting a ‘class’ of device in accordance with BS7882:2017 “Method for calibration and classification of torque measuring devices”.

Modes of Operation

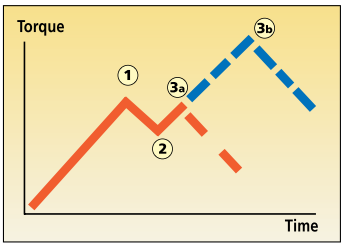

1 = Torque wrench activates
2 = ‘Click’ heard
3a = Wrench released quickly
3b = Wrench released slowly

First Peak of Torque - when a “click type” torque wrench signals that the set torque has been achieved, the applied torque will momentarily drop before climbing again. Generally the fastener stops rotating at point 1, and from a standstill, the breakaway torque to achieve further rotation of the fastener will be higher than point 3b. Only if the operator is very insensitive to the break point will the final tightening effort be incorrect.

“First Peak of Torque” mode will detect the break point of the torque wrench, not the highest torque applied.

Peak Torque - this mode of operation will record the highest torque applied. In the case of a “click type” torque wrench this may be higher than the actual break point if the wrench continues to be loaded beyond the break.

Consequently, Peak Torque is more useful for calibrating devices without a break signal such as dial or electronic wrenches.

Track- this mode has no memory at all. When the load is removed the display will return to zero.

Track is used for calibrating the device itself or for monitoring a fluctuating torque.

Resolution

The smallest measurement interval that can be determined on the indicating device. This applies to analogue and digital devices.

Number of Digits

Digital displays are described as having a certain number of ‘digits’ or ‘active digits’. Half digits can be used to increase the resolution of a device without the expense of going to an additional full active digit.

E.g. 1. 1000 N·m displayed on a 4 digit system would read 1000 (resolution = 1 N·m).

E.g. 2. 1000 N·m displayed on a 4½ digit system would read 1000.0 (resolution = 0.1 N·m).

Active digits change as the torque changes. Non active digits only assist in showing the magnitude of the torque. For example, 10,000 N·m requires 5 digits to display it’s magnitude.

E.g. 3. With 4 active digits (and 1 passive digit), 10,000 N·m would change in steps of 10 N·m.

E.g. 4. With 4½ or 5 active digits, 10,000 N·m would change in steps of 1 N·m.

Signal Processing

Electronic Circuitry falls broadly into two types, analogue and digital, with most electronic measurement systems comprising a mixture of the two. There are also whole analogue electronic systems, but these are rare in torque measurement. Most systems start with an analogue signal. The point at which the signal is converted defines the type.

Analogue systems – one in which the signal is processed before being converted to digital.

Digital systems – the original analogue signal is converted to digital before processing.

TRUCHECK™ 0.1 N·m - 25 N·m

TruCheck™ Plus 25

TruCheck™ Plus 3

For simple, cost effective testing of torque screwdrivers and torque wrenches

- Allows torque tool performance to be monitored and tools kept in peak condition
- Two versions, TruCheck™ and TruCheck™ Plus
- Basic version has no settable options. Ideal for non-expert users
- TruCheck™ Plus allows selection of torque units and modes for 'click' and dial type wrenches
- 'Plus' version allows operator to set a target value and tolerance
- Supplied with traceable calibration certificate

4	TRUCHECK™
43253*	TruCheck™ 0.1 - 3.0 N·m
43250*	TruCheck™ Plus 0.1 - 3.0 N·m
43254*	TruCheck™ 1 - 10 N·m
43251*	TruCheck™ Plus 1 - 10 N·m
43255+	TruCheck™ 1 - 25 N·m
43252+	TruCheck™ Plus 1 - 25 N·m

* 43250, 43251, 43253 and 43254 supplied with ¼" female hex to female sq. adaptor

\+ 43252 and 43255 supplied with ¼" female hex to ¼" female sq. adaptor and ¼" female hex to ⅜" female sq. adaptor

NOTE: UKAS accredited calibration is from 2% to 100% of full scale for 43253 & 43250 and from 10% to 100% of full scale for 43254 & 43251 and from 4% to 100% of full scale for 43255 & 43252.

Model		TruCheck™/Plus 0.1- 25 N·m
Part Number/s		43253 43250 43254 43251 43255 43252
Range		0.1- 3.0 N·m 1- 10 N·m 1- 25 N·m
Accuracy		±1%, ±1 digit over stated operating range
Display		4 digit, 7 segment LED
Dimensions (mm)	A	175
	B	55
	C	13
	D	20
	E	64
	F	64
	G	72
Weight (Kg)		2.6

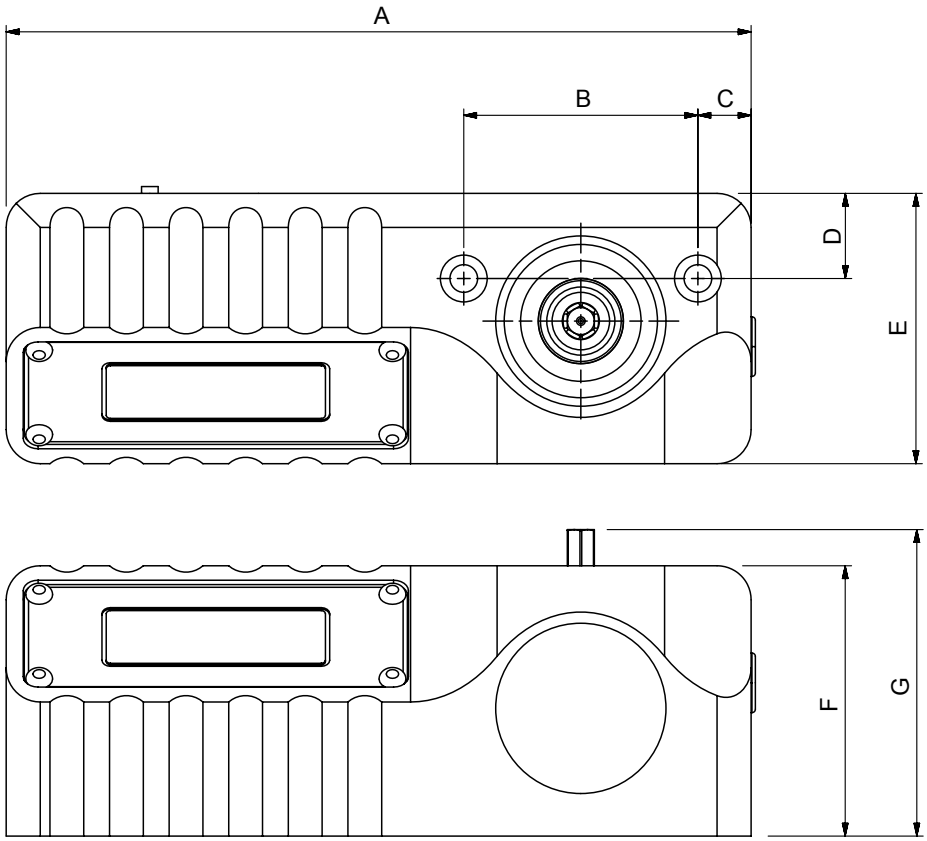

TRUCHECK™ 10 N·m - 2000 N·m

One of the concerns in putting a torque tester into an environment where people are not calibration specialists is that incorrect selections will be made with the potential of incorrect tool setting and consequently joint failure.
The 'TruCheck™' torque wrench testers aim to cut the cost of purchasing a torque wrench calibration system, and remove the fears over the complexity of using such equipment.
There are two versions available, the 'TruCheck™' being the most basic version, and the 'TruCheck™ Plus' having greater functionality, to offer more flexibility.

4	TRUCHECK™
43221*	TruCheck™ 10 - 350 N·m
43226*	TruCheck™ 10 - 250 lbf·ft
43222*	TruCheck™ Plus 10 - 350 N·m
43230+	TruCheck™ 100 - 1000 N·m
43237+	TruCheck™ 75 - 750 lbf·ft
43231+	TruCheck™ Plus 100 - 1000 N·m
43244@	TruCheck™ 200 - 2000 N·m
43245@	TruCheck™ Plus 200 - 2000 N·m
TCACC.CW	UKAS accredited calibration - clockwise
TCACC. CW+CCW	UKAS accredited calibration - clockwise and counter clockwise

* 43221, 43222 and 43226 supplied with ½" female square drive
+ 43230, 43231 and 43237 supplied with 27 mm male hexagon plus ¾" sq. dr. socket
@ 43244 and 43245 supplied with 27 mm male hexagon plus 1" sq.dr socket

NOTE: UKAS accredited calibration is from 5% to 100% of full scale for 43221, 43226, 43222 and 10% to 100% for 43230, 43231, 43237, 43244 & 43245.

NOTE: If you order a UKAS accredited calibration, this certificate will be provided in place of the traceable calibration certificate.

Model		TruCheck™/Plus 10- 350 N·m	TruCheck™ 100- 1000 N·m	TruCheck™ Plus 100- 1000 N·m	TruCheck™/Plus 200- 2000 N·m
Part Number/s		43221 43226 43222	43230 43237	43231	43244 43245
Range		10- 350 N·m 10- 250 lbf·ft	100- 1,000 N·m 75- 750 lbf·ft	100- 1,000 N·m	200- 2,000 N·m
Accuracy		±1%, ±1 digit over stated operating range			
Display		4 digit, 7 segment LED			
Dimensions (mm)	A	150	150	150	150
	B	85	85	85	85
	C	50	50	50	50
	D	33	33	33	33
	E	80	80	80	80
	F	115	115	115	115
	G	18	18	18	18
	H	145	145	145	145
Weight (Kg)		3.1	4.7	4.7	5.7

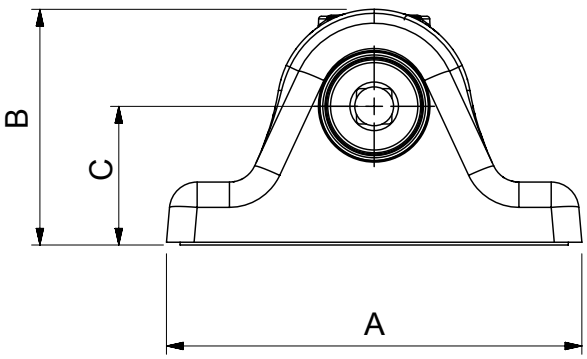

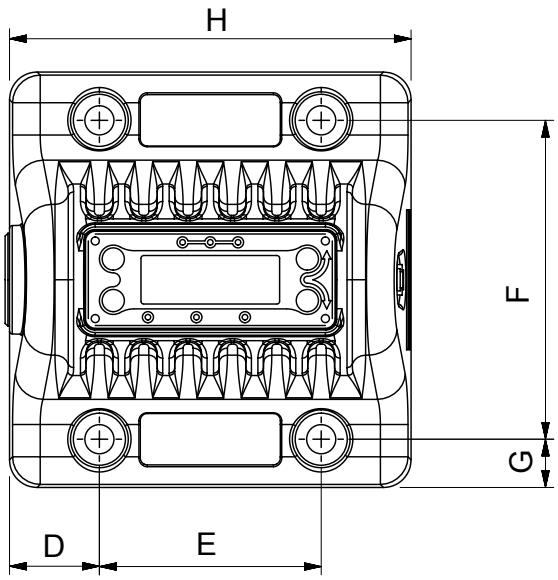

PRO-TEST

The Professional Torque Tester - Series 2, Pro-Test, is an accurate, highly specified and easy to operate instrument for testing and calibrating all types of torque wrench.

- 'Pro-Test' is priced to make in-house testing a viable proposition even for the smaller industrial and automotive torque wrench user
- Guaranteed classification to BS7882:2017, Class 1 or better over the primary calibration range (20% to 100% of full scale), Class 2 or better over the secondary calibration range (lowest calibrated value to 20% of full scale). Class 1 equates to ±0.5% of reading
- Three essential operating modes allow the Pro-Test to be used with all torque wrench types 'Track' displays the live value, 'Peak Memory' records the highest value and 'First Peak Memory' records the first peak of torque (for click type torque wrenches). Both memory modes can be used with manual or automatic reset
- Large back lit display is easily visible from a distance and in poor light
- Display and Transducer are hard-wired together with a 600mm cable
- All common units of torque measurement are included
- Pictorial mode selection incorporated for ease of use
- User can select the language they wish to work in (most European languages are included)
- Transducer can be mounted for torque wrench operation in the horizontal or vertical plane
- RS-232-C is included for the output of reading to a printer, PC, data capture unit, SPC software etc
- Optional mounting plate gives greater flexibility of mounting options
- All user settable parameters are menu selectable from the front panel
- Supplied in a robust carry case with a data transfer lead to connect to a PC or printer
- As standard, all transducers are calibrated in a clockwise direction. For additional counter clockwise direction order: Part No. PROTEST.CCW

4	PRO-TEST (Professional Torque Tester Series 2)
43218	Pro-Test 60, 1.2 - 60 N·m
43219	Pro-Test 400, 8 - 400 N·m
43220	Pro-Test 1500, 30 - 1500 N·m

4	ANCILLARY PRODUCTS FOR PRO-TEST
62198.BLK9005	Mounting Bracket
60253	12v DC Power Supply for Series 2
29190	1" x 36mm socket
29179	¾" x 36mm socket
29143	½" x 36mm socket
29083	⅜" x 36mm socket
PROTEST.CCW	Counter Clockwise Calibration when ordered with new unit

Model		All Models
Part Number/s		43218 43219 43220
Dimensions (mm)	A	55
	B	182
	C	18
	D	70
	E	185
	F	106
	G	233
	H	106
Weight (Kg)		6.3 (Pro-Test 60) 6.4 (Pro-Test 400) 7.3 (Pro-Test 1500)

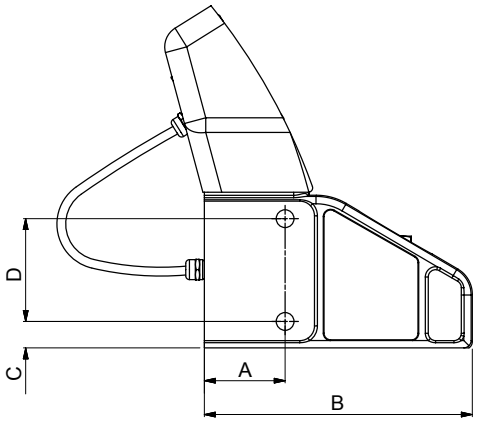

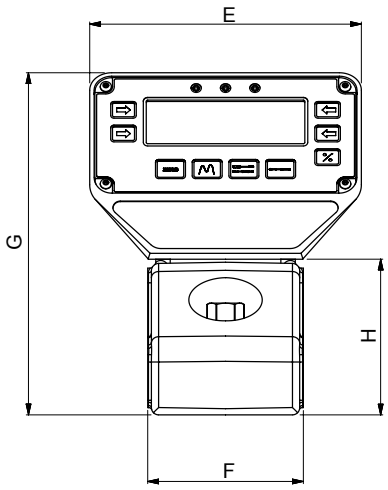

TST

The TST combines simplicity and functionality to provide a high quality instrument for the testing and calibration of low capacity torque tools.

Featuring an internal transducer complete with Rundown Fixture, the TST is available in 3 torque ranges, 0.04 to 2 N·m, 0.5 to 10 N·m and 1.25 to 25 N·m. Class 1 system accuracy over its Primary range (±0.5% of reading from 20% to 100% of full scale).
What makes the TST genuinely versatile is the interface for an external transducer. This interface, accessed by a 2 way switch on the TST, allows the connection of any transducer from Norbar's 'SMART' range and most mV/V calibrated transducers from Norbar or other manufacturers.

- Pictorial display panel for easy mode selection
- Limit detection with low, pass and fail indication. Up to 8 target values can be set
- Digital limit state output for control of external tools
- Operation from fast charge internal battery pack (maximum time of 3 hours 20 minutes for full charge) or a.c. supply (90 to 264 Volts)
- RS-232-C serial data interface for connection to a printer or PC. Continuous RS 232 output when used in track mode (up to 11 readings per sec)
- Pulse count feature in Impulse mode and Clutch Tool mode
- 'SMART' intelligence for transducer recognition
- Memory for calibration details of 20 non-'SMART' mV/V calibrated transducers
- Analogue output allows the instrument to be used as part of a process control system for performance analysis
- User selectable frequency response for each mode of operation
- All user selectable features have password protection. The instrument can be issued to users with only the required modes of operation and units of measure enabled. This feature can virtually eliminate operator induced errors
- ¼" Female Hex to ¼" female square adaptor comes supplied as standard

4	TST (Torque Screwdriver Tester Series 2)
43212	TST 2, 0.04 - 2 N·m
43213	TST 10, 0.5 - 10 N·m
43214	TST 25, 1.25 - 25 N·m
TST.CCW	Counter clockwise calibration when ordered with new unit

Above prices exclude Transducer lead for external transducer (see page 88).
TST is supplied complete with a Rundown Fixture for joint simulation. Additional rundowns are available see page 93.

Model		All Models
Part Number/s		43212 43213 43214
Dimensions (mm)	A	290
	B	52
	C	160
	D	67
	E	56
	F	40
	G	72
	H	61
Weight (Kg)		4.7

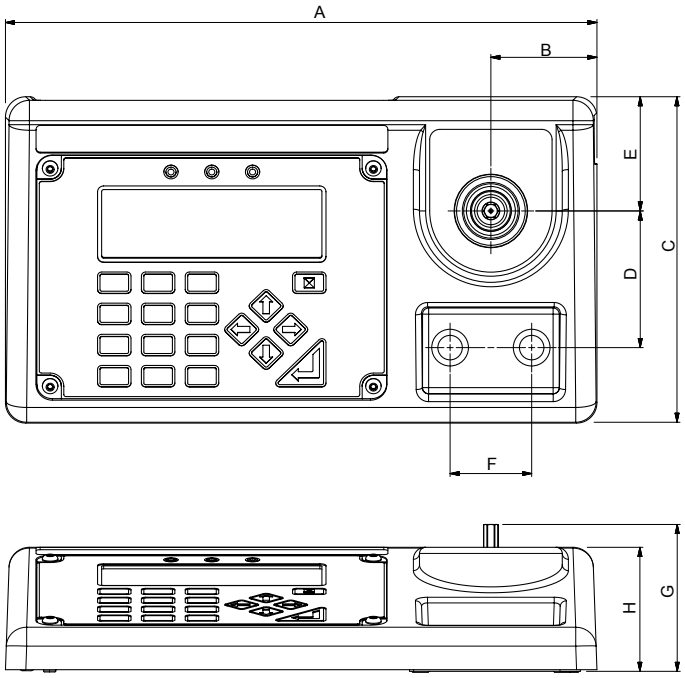

TTT

The TTT shares all of the extensive features of the TST except that it has no internal transducer. Instead, the TTT offers not one but three external transducer interfaces allowing any three transducers to be simultaneously connected. Selection between the transducers is made by a rotary switch at the back of the instrument case.

Any transducer from Norbar's 'SMART' range and most mV/V calibrated transducers from Norbar or other manufacturers can be connected to the TTT. The 'SMART' feature means that once a transducer has been connected, the instrument will automatically recognise calibration details such as mV/V output, serial number and capacity.

- Pictorial display panel for easy mode selection
- Limit detection with low, pass and fail indication. Up to 12 target values can be set
- Digital limit state output for control of external tools
- Operation from fast charge internal battery pack (maximum time of 3 hours 20 minutes for full charge) or a.c. supply (90 to 264 Volts)
- RS-232-C serial data interface for connection to a printer or PC. Continuous RS 232 output when used in track mode (up to 11 readings per sec)
- Pulse count feature in Impulse mode and Clutch Tool mode
- 'SMART' intelligence for transducer recognition, now displays transducer capacity, units and Serial No
- Memory for calibration details of 20 non-'SMART' mV/V calibrated transducers
- Analogue output allows the instrument to be used as part of a process control system for performance analysis.
- User selectable frequency response for each mode of operation
- All user selectable features have password protection. The instrument can be issued to users with only the required modes of operation and units of measure enabled. This feature can virtually eliminate operator induced errors
- Peak memory modes can now be configured to have auto reset (previously only manual reset was possible)
- Series 3 users can set up their own measurement units, making it possible to interface with non torque transducers, for example load or pressure

4	TTT (TORQUE TOOL TESTER SERIES 3)
43228	TTT Instrument
TTT.CCW	Counter clockwise calibration when ordered with new unit

Above TTT part number excludes Transducer leads (see page 88)

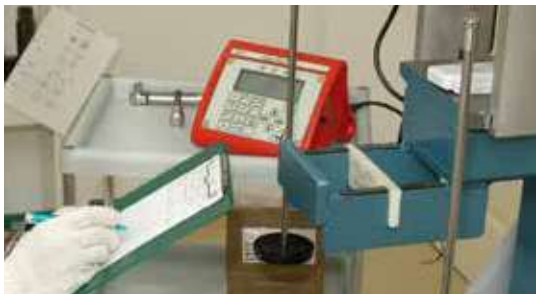

Model		All Models
Part Number/s		43228
Dimensions (mm)	A	152
	B	181
	C	200
Weight (Kg)		4.8

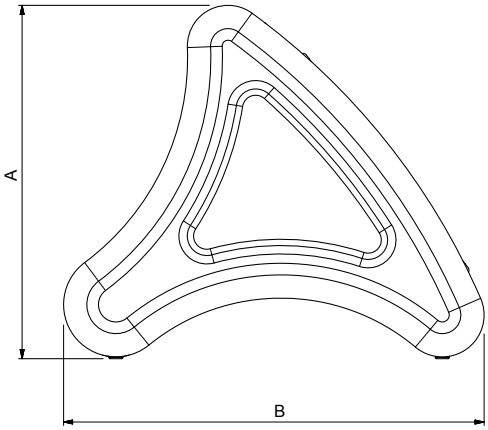

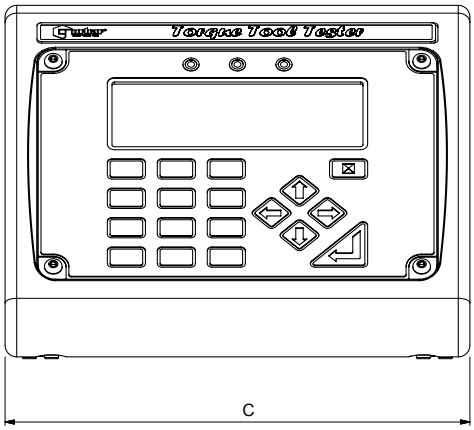

T-BOX XL™ & TDMS

The T-Box XL™ together with Norbar's Torque Data Management System (TDMS) software provides the complete solution for torque tool calibration, data logging and data management and archiving on your PC.

- Can be used as a hand held portable device – using the provided neck strap – or bench mounted
- Features a 7" (178mm) colour touch screen LCD display with on screen graphic icons for simple and easy tool selection
- Can connect up to 4 'SMART' transducers including transducers with angle capabilities for instant connectivity. Alternatively, non Norbar transducers with a mV/V output can be programmed into the T-Box XL™ memory
- 2 USB ports, one RS232 serial port and an ancillary connection (USB cable supplied as standard)
- T-Box XL™ contains a large capacity memory that will enable a user to collect data and store in excess of 100,000 individual test results directly to the instrument and then synchronise to the TDMS software
- Includes 8 modes for torque tool measurement: Track, Click, Dial & Electronic, Stall, Screwdriver, Hydraulic, Graph and Pulse
- Templates for all Norbar tools (Torque Wrenches, PneuTorques & EvoTorques) to enable the operator to easily perform calibrations on their tools to the relevant ISO standard using the in-built calibration program
- Pre-programmed routines for ISO 6789-1:2017 conformance tests and ISO 6789-2:2017 Calibrations
- Automatically guides the user through the calibration routine required for the tool
- In built uncertainty test routines for tools requiring ISO 6789-2:2017 Certificates of Calibration

4	T-BOX XL™
43258	T-Box XL™ Instrument with TDMS Software

4	TDMS SOFTWARE
61132	TDMS Software (supplied on USB Flash Drive)

Supplied as standard with T-Box XL™.

Model		T-Box XL™
Part Number/s		43258
Dimensions (mm)	A	30
	B	100
	C	30
	D	165
	E	205
	F	225
	G	151
Weight (Kg)		4.8

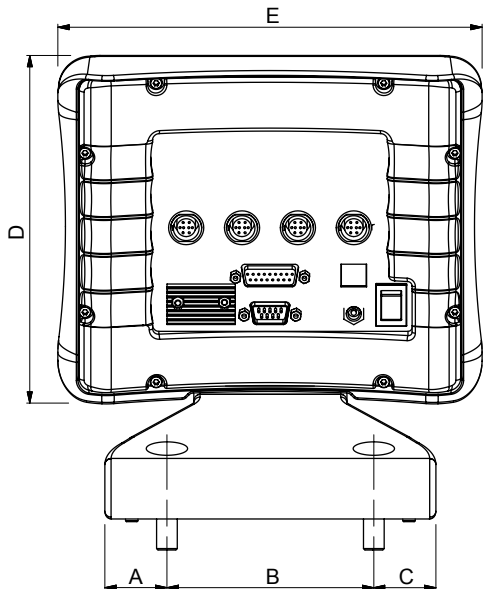

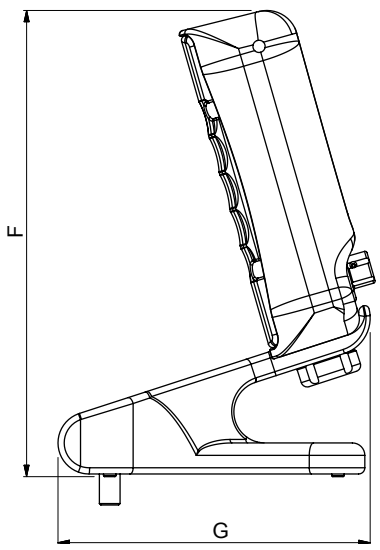

SPARES FOR INSTRUMENTATION PRODUCTS

4	SPARES FOR INSTRUMENTATION PRODUCTS
38876	Rechargeable Battery Pack for Pro-Log, TST & TTT
39406	Battery Pack for T-Box and T-Box XL™
29610	¼" Female – ½" Male Sleeve Adaptor
29611	½" Female – ¾" Male Sleeve Adaptor
29612	½" Female – 1" Male Sleeve Adaptor
29613	¾" Female – 1" Male Sleeve Adaptor
29614	⅜" Female – ½" Male Sleeve Adaptor

4	SERIAL DATA LEAD KIT
60248	Serial Data Lead Kit

Note: Serial Data Lead Kit is not suitable for use with HE Instrument and TruCheck™

60259	USB to Serial Data Lead (Does not work with USM)

This kit enables Norbar "CE Marked" instruments (Post January 1996 ETS, TWA and DTS plus all Pro-Test, TST and TTT) to connect to most PCs.

PART NUMBER SUFFIX SYSTEM

Transducers can be ordered for use with Norbar's current range of instruments (TST, TTT, TTL-HE and T-Box XL™), and as Industry Standard (mV/V calibrated) for certain display instruments from other manufacturers.
A part number suffix system is used to identify the type of calibration required. For example, a 1000 N·m Static Transducer for use with a TTT instrument would become part number 50772.LOG.

SUFFIX	USAGE	CERTIFIED IN
.LOG	TST, TTT, TTL-HE & T-Box XL™	Torque Units
.IND	Instruments of non Norbar manufacture (check with Norbar for suitability) and TST, TTT, TTL-HE & T-Box XL™	mV/V

Where the transducer suffix .LOG is used, the transducer is calibrated with an instrument, as a system, a calibration certificate is provided in torque units. A full scale mV/V figure is also supplied.

TRANSDUCERS FMT

4	FMT (Flange Mounted Transducers)
50671.LOG*	0.04-2 N·m ¼" sq. dr. with Joint Simulator
50671.IND*	0.04-2 N·m ¼" sq. dr. with Joint Simulator
50672.LOG	0.5-10 N·m ¼" sq. dr. with Joint Simulator
50672.IND	0.5-10 N·m ¼" sq. dr. with Joint Simulator
50673.LOG	1.25-25 N·m ¼" + ⅜" sq. dr. with Joint Simulator
50673.IND	1.25-25 N·m ¼" + ⅜" sq. dr. with Joint Simulator
50677.LOG*	0.4-20 lbf·in ¼" sq. dr. with Joint Simulator
50677.IND*	0.4-20 lbf·in ¼" sq. dr. with Joint Simulator
50678.LOG	5-100 lbf·in ¼" sq. dr. with Joint Simulator
50678.IND	5-100 lbf·in ¼" sq. dr. with Joint Simulator
50679.LOG	12.5-250 lbf·in ¼" + ⅜" sq. dr. with Joint Simulator
50679.IND	12.5-250 lbf·in ¼" + ⅜" sq. dr. with Joint Simulator

* If using this transducer with a Series 1 TST or TTT (Part No. s 43198 - 43201) or a Pro-Log Display instrument, please contact Norbar.

4	FMT (Flange Mounted Transducers)
50674.LOG	7.5-150 N·m ½"+ ⅜"sq. dr. with Joint Simulator
50674.IND	7.5-150 N·m ½"+ ⅜"sq. dr. with Joint Simulator
50680.LOG	5-100 lbf·ft ½"+ ⅜"sq. dr. with Joint Simulator
50680.IND	5-100 lbf·ft ½"+ ⅜"sq. dr. with Joint Simulator
50675.LOG	20-400 N·m ½"+ ¾" sq. dr.
50675.IND	20-400 N·m ½"+ ¾" sq. dr.
50681.LOG	12.5-250 lbf·ft ½"+ ¾" sq. dr.
50681.IND	12.5-250 lbf·ft ½"+ ¾" sq. dr.

FMT 2 N·m

FMT 1500 N·m

Flange Mounted Transducers incorporate mounting points for securely fixing the transducer to the working surface. The transducer lead is also included and is fitted with a high quality connector, suitable for attachment to TST, TTT and T-Box XL™ instruments.

4	FMT (Flange Mounted Transducers)
50676.LOG	30-1500 N·m ½", ¾" + 1" sq. dr.
50676.IND	30-1500 N·m ½", ¾" + 1" sq. dr.
50682.LOG	20-1000 lbf·ft ½", ¾" + 1" sq. dr.
50682.IND	20-1000 lbf·ft ½", ¾" + 1" sq. dr.
TD1.CCW	Counter clockwise calibration for FMT & STB when ordered with new unit

Includes integral transducer lead with connector to suit TST, TTT and T-Box XL™

4	FMT (Ancillary Section)
50539	2 N·m Joint Simulator (also fits TST)
50540	10 N·m Joint Simulator (also fits TST)
50541	25 N·m Joint Simulator (also fits TST)
50692	150 N·m Joint Simulator
50819	400 N·m Joint Simulator

52236	¼" Hexagon - ¼" Square Drive Adaptor
52237	¼" Hexagon - ⅜" Square Drive Adaptor
52251	⅜" Female Square - 22mm Bi Square Adaptor
52246	½" Female Square - 22mm Bi Square Adaptor
52245	¾" Female Square - 22mm Bi Square Adaptor
52254	½" Female Square - 35mm Bi Square Adaptor
52241	¾" Female Square - 35mm Bi Square Adaptor
52242	1" Female Square - 35mm Bi Square Adaptor

4	FMT Mounting Brackets
62221.BLK9005	FMT Mounting Bracket 2 to 400 N·m
62220.BLK9005	FMT Mounting Bracket 150 to 1500 N·m

STATIC TRANSDUCERS

The accuracy and quality of the Norbar Static Torque Transducers has made them the first choice of many calibration laboratories throughout the world. Up to 5000 N·m (5000 lbf·ft) classified to BS7882:2017, typically better than Class 1 for the primary classification range (±0.5% of reading from 20% to 100% of full scale).

- Robust, heat treated, alloy steel torsion shaft design
- Designed to ignore non torsional forces
- Operates in clockwise and anti-clockwise directions
- Calibration up to 100,000 N·m with a UKAS accredited Certificate
- Calibrated in clockwise direction as standard. Anti-clockwise provided on request
- 'SMART' transducers have a built in memory circuit which contains essential information about the transducer. This information can be read by Norbar's TST, TTT, TTL-HE & T-Box XL™ instruments meaning that when the transducer is connected, it is immediately recognised and ready for use.
- 'SMART' transducers can also be used with many other instruments. However, these will operate as normal ratio calibrated (mV/V) transducers- the 'SMART' data will not be read.

4	STATIC TRANSDUCERS	
50587.xxx*	0.1-1 N·m	¼" M x ¼" F
50588.xxx	0.25-2.5 N·m	¼" M x ¼" F
50589.xxx	0.5-5 N·m	¼" M x ¼" F
50590.xxx	1-10 N·m	¼" M x ¼" F
50591.xxx	2.5-25 N·m	⅜" M x ⅜" F
50592.xxx	5-50 N·m	⅜" M x ⅜" F
50593.xxx	10-100 N·m	½" M x ½" F
50594.xxx	25-250 N·m	½" M x ½" F
50701.xxx	25-250 N·m	¾" M x ¾" F
50596.xxx	50-500 N·m	¾" M x ¾" F
50772.xxx	100-1000 N·m	1" M x 1" F
50766.xxx	150-1500 N·m	1" M x 1" F
50611.xxx	0.1-1 lbf·ft	¼" M x ¼" F
50615.xxx	0.5-5 lbf·ft	¼" M x ¼" F
50618.xxx	1-10 lbf·ft	¼" M x ¼" F
50620.xxx	2.5-25 lbf·ft	⅜" M x ⅜" F
50836.xxx	5-50 lbf·ft	½" M x ½" F
50624.xxx	10-100 lbf·ft	½" M x ½" F
50625.xxx	25-250 lbf·ft	½" M x ½" F
50702.xxx	25-250 lbf·ft	¾" M x ¾" F
50627.xxx	50-500 lbf·ft	¾" M x ¾" F
50773.xxx	100-1000 lbf·ft	1" M x 1" F
50610.xxx*	1-10 lbf·in	¼" M x ¼" F
50612.xxx	2.5-25 lbf·in	¼" M x ¼" F
50614.xxx	5-50 lbf·in	¼" M x ¼" F
50617.xxx	10-100 lbf·in	¼" M x ¼" F
50619.xxx	25-250 lbf·in	⅜" M x ⅜" F
50621.xxx	50-500 lbf·in	⅜" M x ⅜" F
50623.xxx	100-1000 lbf·in	½" M x ½" F
50609.xxx*	10-100 ozf·in	¼" M x ¼" F

TD2.CCW	Alternative calibration direction for transducers up to 1500 N·m / 1000 lbf·ft when ordered with new unit

M=Male F=Female
Standard Calibration is performed loading clockwise only

4	STATIC TRANSDUCERS	
50703.xxx	250-2500 N·m	1½" M x 1½" F
50791.xxx	300-3000 N·m	1½" M x 1½" F
50599.xxx	500-5000 N·m	1½" M x 1½" F
50669.xxx@	700-7000 N·m	1½" M x 1½" F
50704.xxx	250-2500 lbf·ft	1½" M x 1½" F
50630.xxx	500-5000 lbf·ft	1½" M x 1½" F
TD5.CCW@	Alternative calibration direction for transducers from 1501 N·m to 7000 N·m / 1001 lbf·ft to 5000 lbf·ft when ordered with new unit	
50776.xxx	1000-10000 N·m	2½" M x 2½" F
50603.xxx	2500-25000 N·m	2½" M x 2½" M
50797.xxx	2500-25000 N·m	2½" M x 2½" F
50781.xxx	5000-50000 N·m	2½" M x 2½" F
50794.xxx	5000-50000 N·m	3½" M x 3½" M
50783.xxx	8000-80000 N·m	3½" M x 3½" F
50816.xxx	10000-100000 N·m	3½" M x 3½" F
50796.xxx	10000-100000 N·m	3½" M x 3½" M
50777.xxx	1000-10000 lbf·ft	2½" M x 2½" F
50635.xxx	2500-25000 lbf·ft	2½" M x 2½" M
50798.xxx	2500-25000 lbf·ft	2½" M x 2½" F
50799.xxx	3000-30000 lbf·ft	2½" M x 2½" F
50795.xxx	5000-50000 lbf·ft	3½" M x 3½" M
50782.xxx	6000-60000 lbf·ft	3½" M x 3½" F
50637.xxx+	10000-100000 lbf·ft	3½" M x 3½" M
TD3.CCW+	Alternative calibration direction for transducers from 7001 N·m to 100000 N·m / 5001 lbf·ft to 100000 lbf·ft when ordered with new unit	
-	15000-150000 N·m	4½" M x 4½" M
-	20000-200000 N·m	4½" M x 4½" M

xxx Indicates .LOG or .IND versions, please see page 84.
* .LOG versions not suitable for use with TST, TTT or TTL-HE, purchased pre Feb 2016.
@ UKAS accredited calibration up to 6000 N·m. A non-accredited value at 7000 N·m is extrapolated and provided for reference only.
\+ UKAS accredited calibration up to 80000 lbf·ft. A non-accredited value at 100000 lbf·ft is extrapolated and provided for reference only.

STATIC TRANSDUCERS

4	STATIC TRANSDUCERS
SECCAL.CW	Secondary Calibration in one direction on static transducers with 2½" square drives to extend the range below 10% of the rated capacity, when ordered with new unit
SECCAL.CW+CCW	Secondary Calibration in two directions on static transducers with 2½" square drives to extend the range below 10% of the rated capacity, when ordered with new unit
ADDCALPOINTS.NEW	Additional calibration steps below 10% of rated capacity to 2% for transducers up to 7000 N·m (5000 lbf·ft) when ordered with new unit

Bench stands ensure the correct mounting of Norbar's Static Torque Transducers up to 7000 N·m (5000 lbf·ft).

4	BENCH STANDS FOR STATIC TORQUE TRANSDUCERS
50211	Small frame size (10 N·m) ¼" sq.
50212	Small frame size (50 N·m) ⅜" sq.
50213	Small frame size (100/250 N·m) ½" sq.
50220	Large frame size (250/500 N·m) ¾" sq.
50221	Large frame size (1000/1500 N·m) 1" sq.
50127.BLK9005	Extra large size (7000 N·m) 1½" sq.
52014	¼" Insert for Small Bench Stands
52015	⅜" Insert for Small Bench Stands
52016	½" Insert for Small Bench Stands
52017	¾" Insert for Large Bench Stands
52018	1" Insert for Large Bench Stands

ROTARY TRANSDUCERS

Rotary transducers are designed to measure the torque from continuously rotating shafts such as Impulse Power Tools and certain non-impulse tools with a severe clutch action.

This range offers class leading performance with impulse tools and will be supplied with a UKAS accredited calibration certificate from Norbar's laboratory.

These transducers are known as 'SMART' transducers. They have built-in intelligence in the form of a memory circuit which contains essential information about the transducer which can be read by the appropriate type of instrument (TST, TTT, TTL-HE & T-Box XL™), thus reducing set-up time.

They will also work with instruments that cannot read the memory information, by inputting the relevant calibration details manually.

Not for use with Impact Tools.

Angle measurement also available.

4	ROTARY TRANSDUCERS
50708.xxx	0.25-5 N·m ¼" M/F Hex
50709.xxx	1-20 N·m ¼" M/F Hex
50710.xxx	1-20 N·m ¼" F/M sq. dr.
50719.xxx	0.75-15 lbf·ft ¼" F/M sq. dr.
50711.xxx	3.75-75 N·m ⅜" F/M sq. dr.
50720.xxx	2.5-50 lbf·ft ⅜" F/M sq. dr.
50712.xxx	10-200 N·m ½" F/M sq. dr.
50721.xxx	7.5-150 lbf·ft ½" F/M sq. dr.

4	ROTARY TRANSDUCERS
50713.xxx	12.5-250 N·m ¾" F/M sq. dr.
50722.xxx	10-200 lbf·ft ¾" F/M sq. dr.
50714.xxx	25-500 N·m ¾" F/M sq. dr.
50723.xxx	15-300 lbf·ft ¾" F/M sq. dr.
50715.xxx	75-1500 N·m 1" F/M sq. dr.
50724.xxx	50-1000 lbf·ft 1" F/M sq. dr.
TD2.CCW	Counter clockwise calibration.

Angle options available, contact Norbar.

ANNULAR TRANSDUCERS

These Annular Transducers are designed to fit directly to Norbar torque multipliers and will accurately measure the torque output from the gearbox, via a display instrument (Instrument supplied separately, see pages 82 - 83).

- Up to 6000 N·m classified to BS7882:2017, typically better than Class 1 for the primary classification range (±0.5% of reading from 20% to 100% of full scale)
- Robust heat treated alloy steel torsion tube design
- Designed to ignore non torsional forces

4	ANNULAR TRANSDUCERS FOR HT/ET/PTS™/PTM-92 AND HT/ET/PTS™/PTM-119 SERIES
Suitable for HT/ET/PTS™/PTM-92	
50753.xxx	270-2700 N·m 1" sq. dr.
50793.xxx	400-4000 N·m 1" sq. dr.
Suitable for HT/ET/PTS™/PTM-119	
50755.xxx	450-4500 N·m 1½" sq. dr.
50756.xxx	600-6000 N·m 1½" sq. dr.

Standard Calibration is performed loading counter clockwise only.

4	ANNULAR TRANSDUCERS FOR 72MM SERIES GEARBOX (HT & PT) (Not suitable for PTS™/PTM tools)
Suitable for PT 72mm Remote series and HT-72	
50666.xxx	100-1000 N·m
50667.xxx	150-1500 N·m
50668.xxx	200-2000 N·m

Standard Calibration is performed loading counter clockwise only.

4	ANNULAR TRANSDUCERS FOR PTS/PTM 72
Suitable for PTS/PTM 72mm series	
50840.xxx	100-1000 N·m
50841.xxx	150-1500 N·m
50842.xxx	200-2000 N·m

4	ANNULAR TRANSDUCERS FOR SMALL DIAMETER SERIES GEARBOX (HT & PT)
Suitable for HT60 and PT5500	
50663.xxx	600-6000 N·m 1½" sq. dr.

Standard Calibration is performed loading counter clockwise only.

- 'SMART' transducers have a built in memory circuit which contains essential information about the transducer. This information can be read by Norbar's TST, TTT, TTL-HE & T-Box XL™ instruments meaning that when the transducer is connected, it is immediately recognised and ready for use
- 'SMART' transducers can also be used with many other instruments. However, these will operate as normal ratio calibrated (mV/V) transducers- the 'SMART' data will not be read

4	ANNULAR TRANSDUCERS FOR STANDARD SERIES GEARBOX
Suitable for PT1, PT1A and PT2	
50638.xxx	100-1000 N·m ¾" sq. dr.
50648.xxx	100-1000 lbf·ft ¾" sq. dr.
Suitable for heavy duty HT2, PT1, PT1A and PT2	
50639.xxx	150-1500 N·m 1" sq. dr.
50649.xxx	150-1500 lbf·ft 1" sq. dr.
TD2.CCW	Alternative calibration direction for transducers up to 1500 N·m / 1000 lbf·ft when ordered with new unit
Suitable for HT5 and PT5	
50640.xxx	250-2500 N·m 1" sq. dr.
50650.xxx	250-2500 lbf·ft 1" sq. dr.
50641.xxx	350-3500 N·m 1" sq. dr.
Suitable for HT6 and PT6	
50700.xxx	350-3500 N·m 1½" sq.dr.
Suitable for HT7 and PT7	
50643.xxx	500-5000 N·m 1½" sq. dr.
50652.xxx	500-5000 lbf·ft 1½" sq. dr.
TD5.CCW@	Alternative calibration direction for transducers from 1501 N·m to 7000 N·m / 1001 lbf·ft to 5000 lbf·ft when ordered with new unit

4	ANNULAR TRANSDUCERS FOR STANDARD SERIES GEARBOX
Suitable for HT9 and PT9	
50644.xxx	1000 - 10000 N·m 1½" sq. dr.
50653.xxx	700 - 7000 lbf·ft 1½" sq. dr.
Suitable for HT11 and PT11	
50645.xxx	2000-20000 N·m 2½" sq. dr.
50654.xxx	1500-15000 lbf·ft 2½" sq. dr.
Suitable for HT12 and PT12	
50764.xxx	3500-35000 N·m 2½" sq. dr.
50765.xxx	2500-25000 lbf·ft 2½" sq. dr.
Suitable for HT13 and PT13	
50646.xxx	5000-50000 N·m 2½" sq. dr.
Suitable for PT14	
50647.xxx	10000-100000 N·m 3½" sq. dr.
TD4.CCW	Alternative calibration direction for tranducers from 7001 N·m to 100000 N·m / 5001 lbf·ft to 75000 lbf·ft when ordered with new unit
Suitable for PT18.MTS	
-	30000-300000 N·m

Standard Calibration is performed loading counter clockwise only.

@ UKAS accredited calibration up to 6000 N·m. A non-accredited value at 7000 N·m is extrapolated and provided for reference only.

ANNULAR TRANSDUCERS

Fixed Connector

180° Swivel Connector

4	TORQUE & ANGLE ANNULAR TRANSDUCERS
Suitable for heavy duty PT1, PT1A and PT2	
50820.LOGA*	100-1000 N·m ¾" sq. dr. Fixed Connector
50821.LOGA*+	150-1500 N·m 1" sq. dr. Fixed Connector

* Can only be used with remote/plain sleeve motors i.e. not a standard PT handle, due to cable interference

+Only fits to PT with HD final stage carrier having 1" female sq. dr.

Suitable for HT5 and PT5	
50822.LOGA	350-3500 N·m 1" sq. dr. Fixed Connector
Suitable for HT7 and PT7	
50834.LOGA	500-5000 N·m 1½" sq. dr. 180° Swivel Connector
Suitable for HT9 and PT9	
50824.LOGA	1000-10000 N·m 1½" sq. dr. 180° Swivel Connector
Suitable for HT11 and PT11	
50825.LOGA	2000-20000 N·m 2½" sq. dr. 180° Swivel Connector
Suitable for HT12 and PT12	
50826.LOGA	3500-35000 N·m 2½" sq. dr. 180° Swivel Connector
Suitable for HT13 and PT13	
50827.LOGA	5000-50000 N·m 2½" sq. dr. 180° Swivel Connector
Suitable for HT14 and PT14	
50828.LOGA	10000-100000 N·m 3½" sq. dr. 180° Swivel Connector

PT13 & PT14 require special front cover plate with added dowel clearance holes

Suitable for HT15 and PT15	
50832.LOGA	15000-150000 N·m 4½" sq. dr. 180° Swivel Connector
Suitable for HT16 and PT16	
50829.LOGA	20000-200000 N·m 5" sq. dr. 180° Swivel Connector
Suitable for HT17 and PT17	
50830.LOGA	25000-250000 N·m 6" sq. dr. 180° Swivel Connector
Suitable for HT18 and PT18	
50831.LOGA	30000-300000 N·m 6" sq. dr. 180° Swivel Connector

Torque and Angle Annular Transducer Note:

- 5000 N·m and above include dowels on both mounting faces
- Angle resolution < 1° when used with T-Box XL™
- CW+CCW calibration is standard
- Use 60308.xxx series lead for direct connection to T-Box XL™ for torque and angle/turns monitoring and storage
- PT square drive and other parts may require removal to fit transducer
- All the above are standard construction. Harsh Environment models are available on request
- '.INDA' versions are available on request

Note: PTS™ and reactions with dowel holes can be supplied at an extra cost on request. Request details on PneuTorque® Type '.XD'

4	ANNULAR TRANSDUCERS
SECCAL.CW	Secondary Calibration in one direction on annular transducers for HT/PT9 & HT/PT11 to extend the range below 10% of the rated capacity, when ordered with new unit
SECCAL.CW+CCW	Secondary Calibration in two directions on annular transducers for HT/PT9 & HT/PT11 to extend the range below 10% of the rated capacity, when ordered with new unit
ADDCALPOINTS.NEW	Additional calibration steps below 10% of rated capacity to 2% for transducers up to 7000 N·m (5000 lbf·ft) when ordered with new unit

If ordering a static, annular or rotary transducer you will also require a corresponding lead (see list below).
To comply with the latest calibration standards, most new transducer leads will have a suffix to indicate the length in centimetres.

4	TRANSDUCER LEADS
60216.200	PRO-LOG, TST, TTT & T-Box XL™ to 10 Way Transducer for use with Norbar Rotary Transducers
60217.200	PRO-LOG, TST, TTT & T-Box XL™ to 6 Way Transducer for use with Norbar Static & Annular Transducers
60223.200	PRO-LOG, TST, TTT & T-Box XL™ to no connector
60224.200	10 Way Transducer to no connector
60225.200	6 Way Transducer to no connector
51067.225	ETS to Transducer (Pre 1994) + 5 way (60055)
60152.225	ETS to Transducer (Post 1994) + 5 way (60163)
60308.400	PRO-LOG, TST, TTT & T-Box XL™ to Torque & Angle Annular Transducers
60308.600	PRO-LOG, TST, TTT & T-Box XL™ to Torque & Angle Annular Transducers
60308.1000	PRO-LOG, TST & TTT to Torque & Angle Annular Transducers

Other lengths can be ordered at an additional cost.

Note: The system should be calibrated with the increased length lead, as calibration may be effected.

Note: The maximum permissible cable length is 15m for TST or TTT. Contact Norbar for further details.

TORQUE WRENCH CALIBRATOR - MANUAL

Torque Wrench Calibrator (TWC) 1500 N·m manual shown with Counter-Balanced Reaction Post (62272)

- Enables torque wrench calibration or testing in accordance with ISO 6789-2:2017 if used with T-Box XL™ software version 3.0.0.X and TDMS version 4.0.X
- Also in accordance with BS EN 26789:2003, ISO 6789-1:2017
- Counter Balance Reaction system is designed to allow the tool to level to reduce parasitic loads or movements
- Two speed gearbox designed for a sufficient balance of speed and control which allows for both fast loading of the torque wrench and a slower more precise loading
- Lightweight alloy construction ensures the TWC is easily transported, making it particularly suited for mobile laboratory applications
- Works with Flange Mounted Transducers, Static Transducers (when using part number: 60318), T-Box XL™, TST, TTT and Pro-Test (when using part number: 60323)
- During calibration the TWC maintains a fixed position on the handle of the torque wrench
- Rotating transducer design ensures that the load is applied 90° to the torque wrench handle. The benefit of this precise alignment is that forces are applied squarely to the load point of the handle

Torque Wrench Calibrator (TWC) manual shown with Counter-Balanced Reaction Post (62272), Flange Mounted Transducer and a T-Box XL™

Model		TWC 400	TWC 1500
Part Number/s		60311	60314
Wrench length (Torque Radius)	Min	135	135
	Max	750	1500
Dimensions (mm)	A	596	596
	B	330	330
	C	421	421
	D	1035	1785
Weight (Kg)		35	40

4	TORQUE WRENCH CALIBRATOR (TWC)
60311	Torque Wrench Calibrator 400 N·m Manual
60314	Torque Wrench Calibrator 1500 N·m Manual

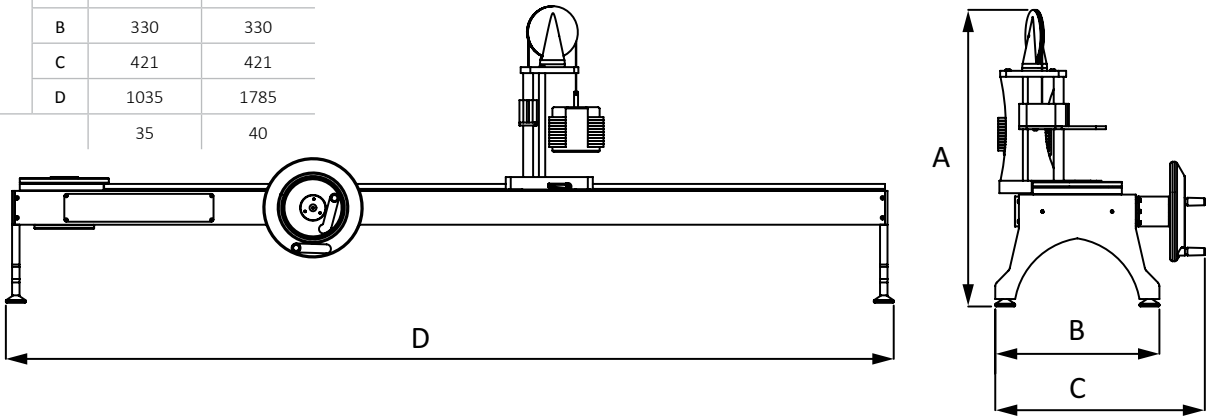

TORQUE WRENCH CALIBRATOR - ANCILLARIES

4	TWC ANCILLARIES
60318	Static Transducer Support Kit
60319	Short Length Reaction Post
60322	Quick Release FMT Kit
60323	Pro-Test and Static Torque Block Adaptor Kit
60324	Hexagon Adaptor Kit
60326	Bench Mounting Kit
60327	FMT 25 Adaptor Kit
29214	1" Male to ¾" Female Flanged Square Drive Adaptor
29215	1" Male to ½" Female Flanged Square Drive Adaptor
29216	1" Male to ⅜" Female Flanged Square Drive Adaptor
29217	1" Male to ¼" Female Flanged Square Drive Adaptor

60318 Static Transducer Support Kit and
60319 Short Length Reaction Post

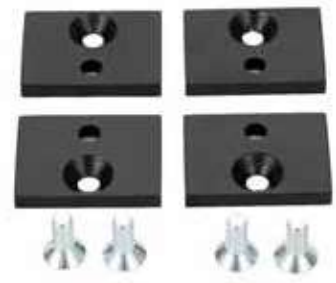

60326 Bench Mounting Kit

60322 Quick Release FMT Kit

60324 Hexagon Adaptor Kit

29214 Flanged Square Drive Adaptor

60323 Pro-Test and Static Torque Block Adaptor Kit

ISO 3000 LOADER

4	TORQUE WRENCH LOADERS
20505	Loader, ISO 3000 N·m
20506	Motorised ISO 3000 N·m

TORQUE WRENCH CALIBRATOR - AUTO

Coming Soon

For a complete torque wrench calibration system, just add the transducer range appropriate for the wrenches you wish to calibrate and accessories from page 90.

4	TORQUE WRENCH CALIBRATOR (TWC)
60312	Torque Wrench Calibrator 400 N·m Auto
60313	Torque Wrench Calibrator 1500 N·m Auto

- Enables torque wrench calibration or testing in accordance with ISO 6789:2017 Part 1 and 2
- Counter Balance Reaction system is designed to allow the tool to level to reduce parasitic loads or movements
- Lightweight alloy construction ensures the TWC is easily transported, making it particularly suited for mobile laboratory applications
- Works with Flange Mounted Transducers and Static Transducers
- During calibration, the TWC maintains a fixed position on the handle of the torque wrench
- Rotating transducer design ensures that the load is applied 90° to the torque wrench handle. The benefit of this precise alignment is that forces are applied squarely to the load point of the handle
- Supplied with a powerful yet simple touchscreen User Interface (UI) (keyboard and mouse also supported if desired)
- Flexible tool template system; define templates by type, ISO classification and supported units and torque ranges, program in your desired calibration workflow then use these to register tools for calibration
- Ability to store multiple units and ranges in a single template for a neater, smaller list of templates
- Programmable calibration workflow for each template, can be pre-set to ISO compliant flow for the given tool for a faster set-up or can also support bespoke non-ISO compliant workflows
- Calibration job management; book calibrations, track progress of previous bookings and resume them
- Automated management of calibration and conformance workflows for non-indicating tools
- Intelligent rate control system ensures fast cycling of tools while maintaining compliance with 2017 standards
- Environmental monitoring (humidity/temperature) to ensure compliance with 2017 requirements
- Automated management of uncertainty data for ISO 6789-2:2017 calibrations, guiding the user through the process using dynamically generated instructions based on the current tool's ISO classification and workflow
- Inbuilt data analysis and certification generation seamlessly move from calibration/conformance procedure to certificate generation, no third-party software required
- Huge amount of inbuilt storage allowing for year's worth of calibration data through normal use

The Automated TWC is currently in development and is subject to change, therefore the information provided may alter upon the launch of the product.

TORQUE WRENCH CALIBRATOR - AUTO

Screen shot samples of what the software may look like:

Main menu

Tool template editor

Calibration job booking / editor

Tool cycling and adjustment

Tool cycling and adjustment whilst in operation

Model		TWC Auto 400	TWC Auto 1500
Part Number/s		60312	60313
Wrench length (Torque Radius)	Min	135	135
	Max	750	1500
Dimensions (mm)	A	596	596
	B	330	330
	D	1035	1785
Weight (Kg)		TBC	TBC

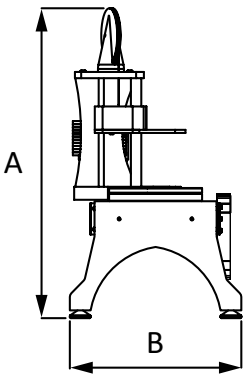

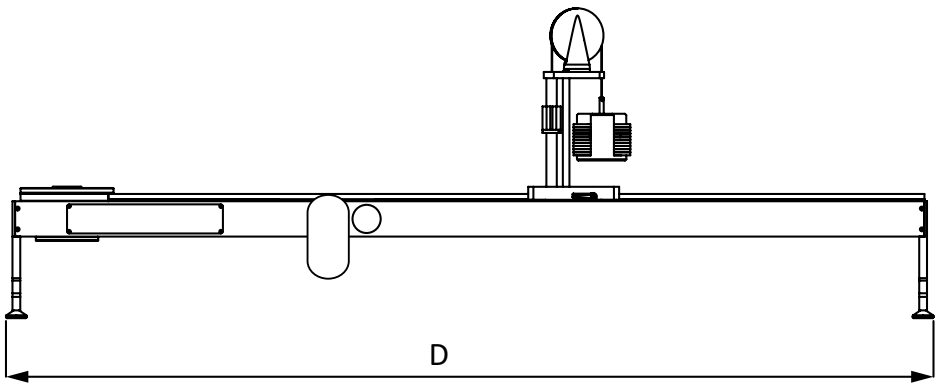

The Norbar Joint Simulation Rundown Assemblies are designed to simulate the working conditions of screwed or bolted joints. Used in conjunction with a Norbar transducer and display instrument, the output of torque controlled power tools can be measured against a range of simulated joint rates, from hard through to soft.

4	JOINT SIMULATION RUNDOWN ASSEMBLIES
50313	0.2-2 N·m (2-20 lbf·in)
50251	2-10 N·m (20-100 lbf·in)
50252	5-50 N·m (5-50 lbf·ft)
50253	10-100 N·m (10-100 lbf·ft)
50254*	100-500 N·m (100-500 lbf·ft)

The above are for use with Norbar static square to square transducers and bench stands.

* To be used with large frame size bench stands, all others to be used with small frame bench stands.

50693	10-140 N·m (10-100 lbf·ft)
50694	100-700 N·m (70-500 lbf·ft)

The above are for use with the Norbar STB1000.

4	WASHER STACKS FOR JOINT SIMULATION RUNDOWN ASSEMBLIES
50175	0.2-0.7 N·m Stack A for use with 50313
50176	0.5-1.4 N·m Stack B for use with 50313
50177	1.2-2.8 N·m Stack C for use with 50313
50178	2-6 N·m Stack D for use with 50251
50179	6-12 N·m Stack E for use with 50251
50695	5-30 N·m Stack A for use with 50252
50696	20-50 N·m Stack B for use with 50252
50697	50-70 N·m Stack C for use with 50252
50180	10-50 N·m Stack F for use with 50253 and 50693
50192	30-100 N·m Stack G for use with 50253 and 50693
50698	80-140 N·m Stack H for use with 50253 and 50693

Shown with TruCheck™ Plus 1000 (not included)

Shown with 1½" M/F Static Transducer (not included)

4	POWER TOOL TEST FIXTURE FOR TRUCHECK™ PLUS 1000 AND 2000
50757	Power Tool Test Fixture for TruCheck™ Plus 1000
50774	Power Tool Test Fixture for TruCheck™ Plus 2000
50758	1000 N·m Joint Simulator Rundown Assembly
50775	2000 N·m Joint Simulator Rundown Assembly

4	ET/PT POWER TOOL TEST RIG
50800	7000 N·m ET, PT Power Tool Test Rig (supplied with the 8 reaction plates on page 94 (excluding blank reaction plate) and ¾", 1" and 1½" sq. dr. adaptors)
50803	7000 N·m ET, PT Power Tool Test Rig without Reaction Plates (supplied with ¾", 1" and 1½" sq. dr. adaptors)

Note: The static transducer 50669.LOG does not come supplied as standard with the tool test rig. The standard range of 700 - 7000 N·m will not cover the full powered multiplier range, additional calibration may be required, please see below:

ADDCALPOINTS.NEW
Additional calibration steps below 10% of rated capacity to 2% for transducers up to 7000 N·m (5000 lbf·ft) when ordered with new unit

TEST FIXTURES

1½" M/F Static Transducer required (not included)

4	7000 N·m UNIVERSAL TOOL TEST RIGS
50801	Universal 7000 N·m ET, PT & Hydraulic Tool Test Rig (supplied with the 8 reaction plates to the right (excluding blank reaction plate) and ¾", 1" and 1½" sq. dr. adaptors)
50804	Universal 7000 N·m Test Rig without Reaction Plates (supplied with ¾", 1" and 1½" sq. dr. adaptors)

Universal Hydraulic Tool Test Rig with Reaction Plates (50801)

4	SPARES FOR 50800, 50801, 50803 & 50804
50800.29	2" AF Socket 1½" sq. dr.
50800.28	2" AF Socket 1" sq. dr.
50800.27	2" AF Socket ¾" sq. dr.

50800.26	Special 2" UNC Bolt
50800.25	Type B UNC High Tensile 2" UNC Nut
50548.4	Washer Stack Kit 100 - 7000 N·m (Also for use with RD5000)

See page 96 for accessories for use with Hydraulic Tool Calibration Fixture.

4	REACTION PLATES FOR USE WITH 50803 & 50804

81024	Suitable for ET/PTM 119, PT 4500 and PT 5500

81025	Suitable for ET/PTM 92

81026	Suitable for ET/PT/PTM 72

81027	Suitable for PTM 52

81028	Suitable for PT 2700

81029	Suitable for PT 1, PT 1A and PT 2

81030	Suitable for PT 5 and PT 6

81031	Suitable for PT 7

81032	Blank Reaction Plate for Universal Test Rigs

HYDRAULIC TOOL CALIBRATION FIXTURES

Hydraulic Tool Calibration Fixtures	96
Hexagon to Square Adaptors	97

Norbar's Hydraulic Tool Calibration Fixture is a robust device that allows accurate testing of hydraulic torque wrenches. A system comprises of a Calibration Fixture and Transducer, also required is a torque measuring instrument and transducer cable.

- Bearing support for transducer gives improved accuracy
- Interchangeable stainless steel square and round reaction posts
- Hardened steel inserts to location reaction posts in two positions: suits most hydraulic wrenches
- Optimised material sections for robust but portable design
- For hexagon link wrenches, a wide range of hexagon to square adaptors are available

HYDRAULIC TOOL CALIBRATION FIXTURES

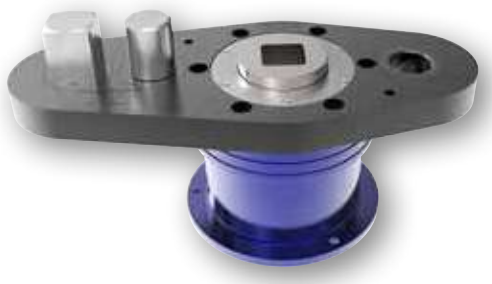

Hydraulic Tool Calibration Fixture shown with Transducer (Transducer not included)

4	CALIBRATION FIXTURES
80031	Hydraulic Calibration Fixture up to 7000 N·m
80029	Hydraulic Calibration Fixture up to 50000 N·m
80032	Hydraulic Calibration Fixture up to 80000 N·m
81022	Reaction Bar for 80031
81023	Reaction Bar for 80029

4	TRANSDUCERS FOR USE WITH 80031 / 80030
50703.xxx*	250-2500 N·m 1½" sq. dr. M/F
50704.xxx*	250-2500 lbf·ft 1½" sq. dr. M/F
50599.xxx*	500-5000 N·m 1½" sq. dr. M/F
50630.xxx*	500-5000 lbf·ft 1½" sq. dr. M/F
50669.xxx*	700-7000 N·m 1½" sq. dr. M/F

4	TRANSDUCERS FOR USE WITH 80029 / 80030
50776.xxx@	1000-10000 N·m 2½" sq. dr. M/F
50777.xxx@	1000-10000 lbf·ft 2½" sq. dr. M/F
50797.xxx@	2500-25000 N·m 2½" sq. dr. M/F
50781.xxx@	5000-50000 N·m 2½" sq. dr. M/F
50798.xxx@	25000 lbf·ft 2½" sq. dr. M/F

4	TRANSDUCERS FOR USE WITH 80032
50782.xxx	6000-60000 lbf·ft 3½" sq. dr. M/F
50783.xxx	8000-80000 N·m 3½" sq. dr. M/F

Harsh Environment Transducers available on request.

4	DUAL CALIBRATION FIXTURE
80030	Dual Calibration Fixture

Note: Houses 1 transducer up to 7000 N·m and 1 transducer up to 50000 N·m in a bench top plate.

9	ADDITIONAL CALIBRATION

The transducers shown include clockwise only calibration from 10% to 100% of rated capacity. For other calibration options, see below:

***ADDCALPOINTS.NEW**
Additional calibration steps below 10% of rated capacity to 2% for transducers up to 7000 N·m (5000 lbf·ft) when ordered with new unit

@SECCAL.CW
Secondary Calibration in one direction on static transducers with 2½" square drives to extend the range below 10% of the rated capacity, when ordered with new unit

SECCAL.CW+CCW
Secondary Calibration in two directions on static transducers with 2½" square drives to extend the range below 10% of the rated capacity, when ordered with new unit

Hexagon to Square Adaptor

4	HEXAGON TO SQUARE ADAPTORS - METRIC
29619.24	24mm Hex to 1½" Sq. (Max 3000 N·m)
29619.27	27mm Hex to 1½" Sq. (Max 4000 N·m)
29619.30	30mm Hex to 1½" Sq. (Max 4000 N·m)
29619.32	32mm Hex to 1½" Sq. (Max 4900 N·m)
29619.36	36mm Hex to 1½" Sq. (Max 7000 N·m)
29619.41	41mm Hex to 1½" Sq. (Max 8700 N·m)
29619.46	46mm Hex to 1½" Sq. (Max 8700 N·m)
29619.50	50mm Hex to 1½" Sq. (Max 8700 N·m)
29619.55	55mm Hex to 1½" Sq. (Max 8700 N·m)
29619.60	60mm Hex to 1½" Sq. (Max 8700 N·m)
29619.65	65mm Hex to 1½" Sq. (Max 8700 N·m)
29619.70	70mm Hex to 1½" Sq. (Max 8700 N·m)
29619.75	75mm Hex to 1½" Sq. (Max 8700 N·m)
29619.80	80mm Hex to 1½" Sq. (Max 8700 N·m)
29620.50	50mm Hex to 2½" Sq. (Max 18500 N·m)
29620.55	55mm Hex to 2½" Sq. (Max 25000 N·m)
29620.60	60mm Hex to 2½" Sq. (Max 32000 N·m)
29620.65	65mm Hex to 2½" Sq. (Max 36000 N·m)
29620.70	70mm Hex to 2½" Sq. (Max 36000 N·m)
29620.75	75mm Hex to 2½" Sq. (Max 36000 N·m)
29620.80	80mm Hex to 2½" Sq. (Max 59000 N·m)
29620.85	85mm Hex to 2½" Sq. (Max 59000 N·m)
29620.90	90mm Hex to 2½" Sq. (Max 59000 N·m)
29620.95	95mm Hex to 2½" Sq. (Max 59000 N·m)
29620.100	100mm Hex to 2½" Sq. (Max 52000 N·m)
29620.105	105mm Hex to 2½" Sq. (Max 52000 N·m)
29620.110	110mm Hex to 2½" Sq. (Max 52000 N·m)
29620.115	115mm Hex to 2½" Sq. (Max 52000 N·m)
29620.130	130mm Hex to 2½" Sq. (Max 52000 N·m)

Dual Calibration Fixture
Part No. 80030
(Transducers not included)

HEXAGON TO SQUARE ADAPTORS

Fixture shown with Hydraulic Torque Wrench

4	HEXAGON TO SQUARE ADAPTORS - IMPERIAL
29623.I20	1¼" Hex to 1½" Sq. (Max 4900 N·m)
29623.I23	1 7/16" Hex to 1½" Sq. (Max 7000 N·m)
29623.I26	1⅝" Hex to 1½" Sq. (Max 8700 N·m)
29623.I29	1 13/16" Hex to 1½" Sq. (Max 8700 N·m)
29623.I32	2" Hex to 1½" Sq. (Max 8700 N·m)
29623.I35	2 3/16" Hex to 1½" Sq. (Max 8700 N·m)
29623.I38	2⅜" Hex to 1½" Sq. (Max 8700 N·m)
29623.I41	2 9/16" Hex to 1½" Sq. (Max 8700 N·m)
29624.I35	2 3/16" Hex to 2½" Sq. (Max 25000 N·m)
29624.I38	2⅜" Hex to 2½" Sq. (Max 32000 N·m)
29624.I41	2 9/16" Hex to 2½" Sq. (Max 36000 N·m)
29624.I44	2¾" Hex to 2½" Sq. (Max 36000 N·m)
29624.I47	2 15/16" Hex to 2½" Sq. (Max 36000 N·m)
29624.I50	3⅛ " Hex to 2½" Sq. (Max 59000 N·m)

4	HEXAGON TO SQUARE ADAPTORS - IMPERIAL
29624.I56	3½" Hex to 2½" Sq. (Max 59000 N·m)
29624.I62	3⅞" Hex to 2½" Sq. (Max 52000 N·m)
29624.I68	4¼" Hex to 2½" Sq. (Max 52000 N·m)
29624.I74	4⅝ " Hex to 2½" Sq. (Max 52000 N·m)
29624.I80	5" Hex to 2½" Sq. (Max 52000 N·m)
29624.I86	5⅜" Hex to 2½" Sq. (Max 52000 N·m)
29624.I98	6⅛" Hex to 2½" Sq. (Max 52000 N·m)

4	SLEEVE ADAPTORS
86034.4	Adaptor 1½" Male sq. ¾" Female sq.
21214	Adaptor 1½" Male sq. 1" Female sq.
29617	Adaptor 2½" Male sq. 1½" Female sq.
29618	Adaptor 3½" Male sq. 2½" Female sq.

Special 'Engineer to Order' hexagon and square adaptors available on request.

Sleeve Adaptors

HARSH ENVIRONMENT

Norbar have worked closely with the oil and gas industry to produce a range of torque instruments and transducers suitable for use in the harshest environments such as ship decks, oil rigs and refineries. Norbar uses a variety of corrosion resistant materials, high specification connectors and sealing techniques meaning that products in our HE range can be used in such environments without impairing their performance or life span. Although originally designed to meet the needs of the oil and gas industry, Norbar's HE range is the ideal choice whenever it is necessary to apply or measure torque outdoors in potentially wet or dusty conditions.

Harsh Environment Instrument	99
TTL-HE Instrument And Transducer Kits	99
Harsh Environment Transducers	100
Intervention Tool Verification Kits	101
Intervention Tool Test Pots	102
Multipliers For Subsea	102
Engineer To Order	103

HARSH ENVIRONMENT INSTRUMENT

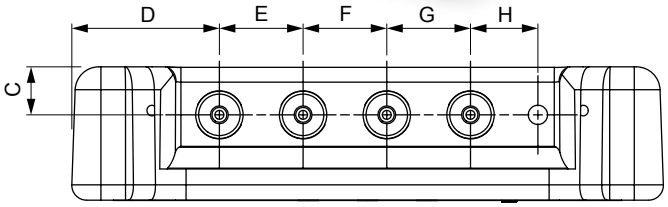

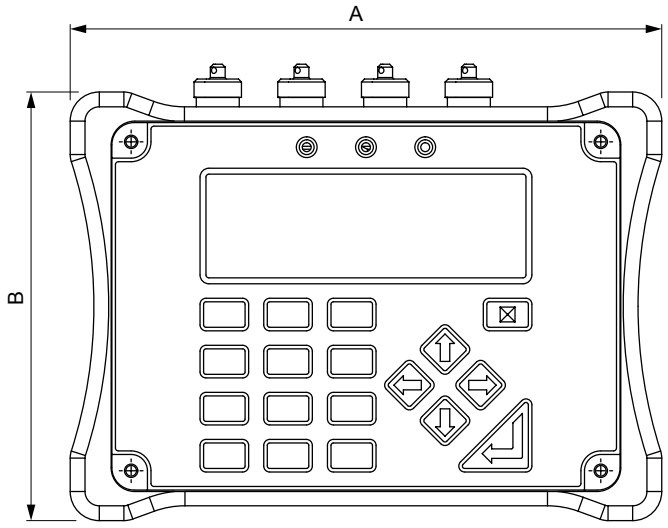

TTL-HE is a portable torque measuring instrument designed for use in harsh environments. The TTL-HE operating on battery power with one of the 'HE' range of transducers connected, has an ingress protection rating of IP65/IP67. Typical operating environments are where high humidity, water or salt water spray and dust may be an issue. Features include; 10 measurement modes, 13 units of torque (with additional USER units feature), 12 pairs of limits and text displayed in 11 languages.

- IP65/67 rated
- Bi-directional calibration
- Battery power use in harsh environments (mains supply for charging)
- All features are in common with TST and TTT instruments
- Supplied in IP67 rated carry case
- 5 digit resolution for all Norbar transducers
- 240 x 64 pixel dot matrix display with update rate of twice per second
- Please contact Norbar for full details of available transducers

4	HARSH ENVIRONMENT RANGE
43217	TTL-HE Instrument (inc. IP67 rated carry case)

Supplied with clockwise and counterclockwise calibration.

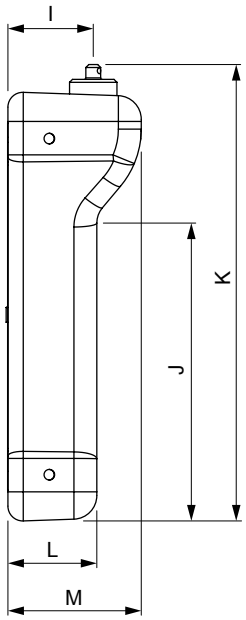

Model		TTL-HE
Part Number/s		43217
Dimensions (mm)	A	200
	B	145
	C	16
	D	50
	E	28
	F	28
	G	28
	H	23
	I	29
	J	101
	K	154
	L	30
	M	45
Weight (Kg)		4.87

TTL-HE INSTRUMENT AND TRANSDUCER KITS

4	TTL-HE INSTRUMENT AND TRANSDUCER KITS	
60287.LOG	5000 N·m M/M TTL-HE Kit, inc. Lead	(Class 4)
60295.LOG	10000 N·m M/M TTL-HE Kit, inc. Lead	(Class 5)
60296.LOG	15000 N·m M/M TTL-HE Kit, inc. Lead	(Class 6)
60289.LOG	40000 N·m M/M TTL-HE Kit, inc. Lead	(Class 7)

Note: Kits for use with Intervention Tool Test Pots

HARSH ENVIRONMENT TRANSDUCERS

The accuracy and quality of the Norbar torque transducers has made them the first choice of many calibration laboratories throughout the world. The Harsh Environment Range of transducers has been specifically designed for use with the Norbar TTL-HE instrument.

- Class 1 accuracy over the 'Primary' classification range (±0.5% of reading from 20 to 100% of full scale)
- IP65/IP67 rated
- Stainless steel design with 'SMART' intelligence
- Bi-Direction calibration as standard

4	STATIC TRANSDUCERS
50787.xxx	300-3000 N·m 1½" M/F sq. dr.
50751.xxx*	300-3000 N·m 1½" M/M sq. dr.
50705.xxx	500-5000 N·m 1½" M/F sq. dr.
50729.LOG	500-5000 N·m 1½" M/M sq. dr.
50706.xxx	500-5000 lbf·ft 1½" M/F sq. dr.
50728.xxx	1000-10000 N·m 2½" M/F sq. dr.
50788.xxx	1000-10000 N·m 2½" M / 2" M sq. dr.
50789.xxx	1500-15000 N·m 2½" M / 2⅝" M sq. dr.
50726.xxx	2500-25000 N·m 3½" M/M sq. dr.
50727.xxx	4000-40000 N·m 3½" M/M sq. dr.
50743.xxx+	10000-100000 lbf·ft 3½" M/M sq. dr.

* Suitable for use in Hydraulic Test Pots.

\+ UKAS accredited calibration up to 80000 lbf·ft. A non-accredited value at 100000 lbf·ft is extrapolated and provided for reference only. Static Transducers 3000 N·m and above supplied in carry case.

4	ANNULAR TRANSDUCERS
50767.xxx	100 - 1000 N·m including drive shaft
50745.xxx	350 - 3500 N·m including drive shaft
50725.xxx	1000 - 10000 N·m no drive shaft

Other transducers available upon request.
All above HE transducers supplied with clockwise and counterclockwise calibration.

Designed for use with the Harsh Environment Instrument range (TTL-HE) of products

4	INSTRUMENTATION LEADS
60245.200	TTL-HE to HE Transducer
60250.200	TTL-HE to Norbar Static & Annular Transducers
60263.200	TTL-HE to Rotary Transducers
60266.200	HE Transducer to TTT, TST and T-Box XL™
60261.200	Serial Data Lead for TTL-HE

Other lengths can be ordered at an additional cost.

Note: The system should be calibrated with the increased length lead, as calibration may be affected.

Note: The maximum permissible cable length 15m for Transducer Leads, 7m if using 60266 with a T-Box XL™.
Contact Norbar for further details.

Static Transducers - Male to Female (M/F) Square Drives

Model		3,000 N·m 5,000 N·m 5,000 lbf·ft	10,000 N·m
Part Number/s		50787.xxx 50705.xxx 50706.xxx	50728.xxx
Dimensions (mm)	A	160	189
	B	40	56
	C	43	63.5
	ØD	80	110
	E	72	70
	F	49	64
	ØG	50	81
	ØH	95	110
	I	80	95
Weight (Kg)		5.0	9.1

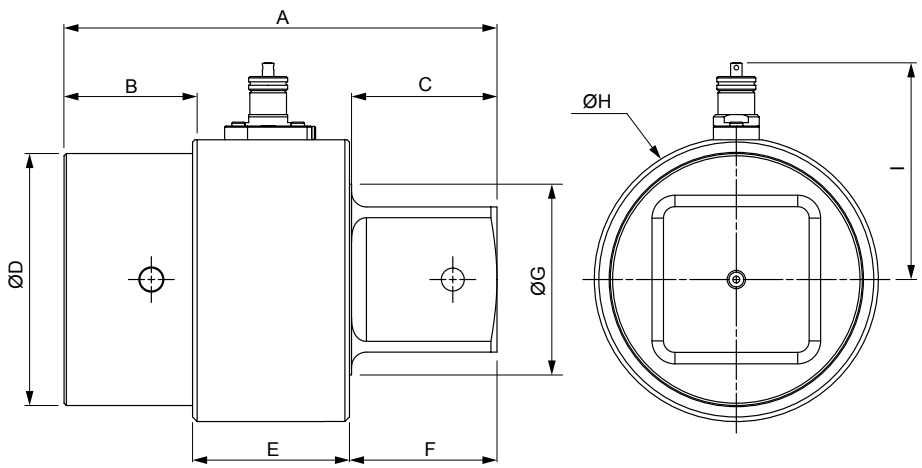

HARSH ENVIRONMENT TRANSDUCERS

Static Transducers - Male to Male (M/M) Square Drives

Model		3,000 N·m 5,000 N·m	10,000 N·m	15,000 N·m	25,000 N·m 40,000 N·m 100,000 lbf·ft
Part Number/s		50751.xxx 50729.xxx	50788.xxx	50789.xxx	50726.xxx 50727.xxx 50743.xxx
Dimensions (mm)	A	168	200	225	271
	B	43	64	89	86
	C	43	64	64	86
	ØD	50	81	87	120
	ØE	95	110	110	164
	F	72	69	69	74
	G	20	20	20	20
	H	80	87	87	115.1
Weight (Kg)		3.4 (3,000 N·m) 5.0 (5,000 N·m)	11.4	11.4	21.5 (25,000 N·m) 22.0 (40,000 N·m) 25.0 (100,000 lbf·ft)

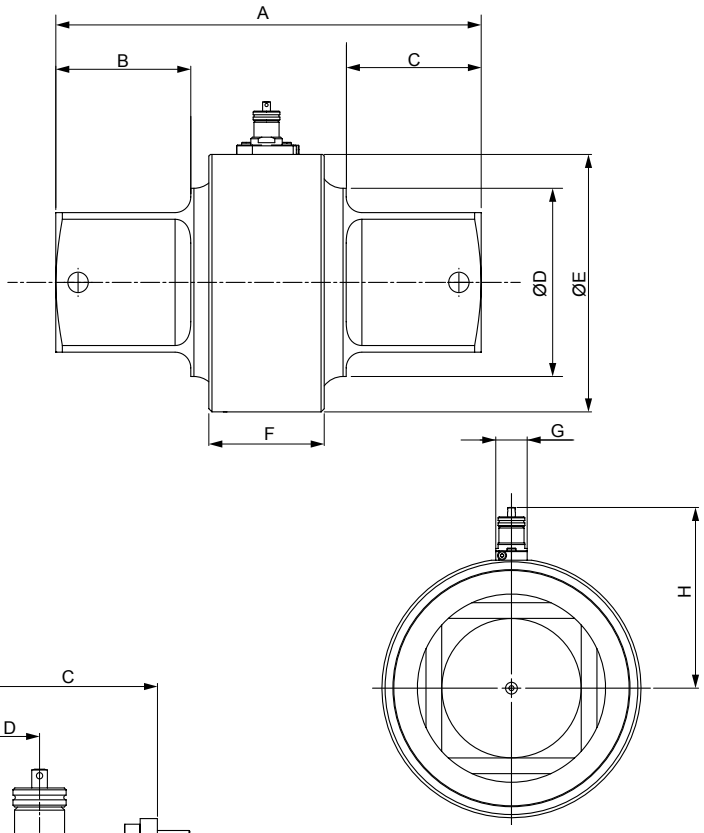

Annular Transducers

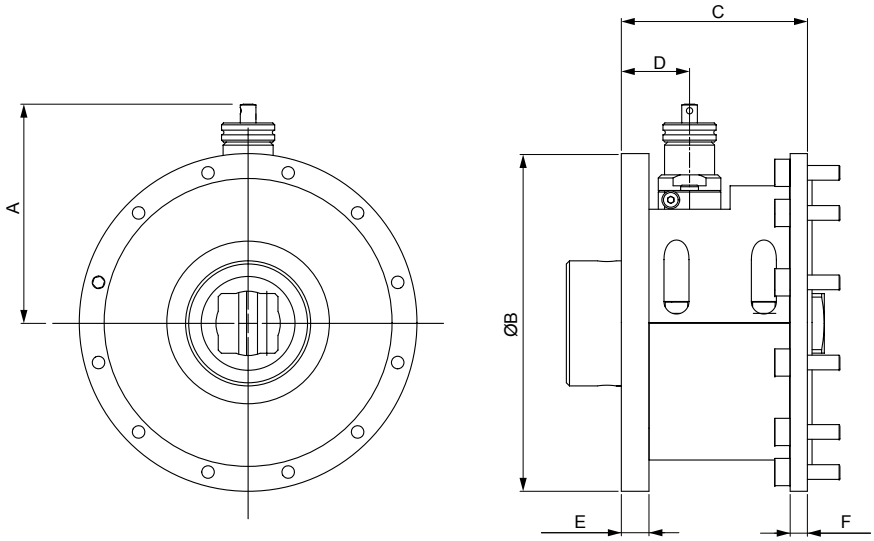

Model		1,000 N·m	3,500 N·m	10,000 N·m
Part Number/s		50767.xxx	50745.xxx	50725.xxx
Dimensions (mm)	A	70	70	100
	ØB	108	119	178
	C	60	65	77
	D	22	23	39
	E	9	10	16
	F	6	10	16
Weight (Kg)		3.4	4.0	5.8

INTERVENTION TOOL VERIFICATION KITS

4	INTERVENTION TOOL TORQUE VERIFICATION KIT
60278.xxx	3000 N·m ISO13628 Class 4 Intervention Tool Torque Verification Kit
60281.xxx	10000 N·m ISO13628 Class 5 Intervention Tool Torque Verification Kit
60282.xxx	15000 N·m ISO13628 Class 6 Intervention Tool Torque Verification Kit
60279.xxx	25000 N·m API 17D Class 7 (short) Intervention Tool Test Kit
60280.xxx	40000 N·m API 17D Class 7 (short) Intervention Tool Test Kit

Other Test Pots and Torque Verification Kits are available for standard and non standard API Intervention tool test and verification.
Please contact Norbar.

INTERVENTION TOOL TEST POTS

Model		Class 4	Class 5	Class 6	Class 7
Part Number/s		80019	80024	80025	80020
Dimensions (mm)	A	372	403	428	425
	B	215	246	326	326
	C	312	342	448	428
Weight (Kg)		17.5	22	51	48

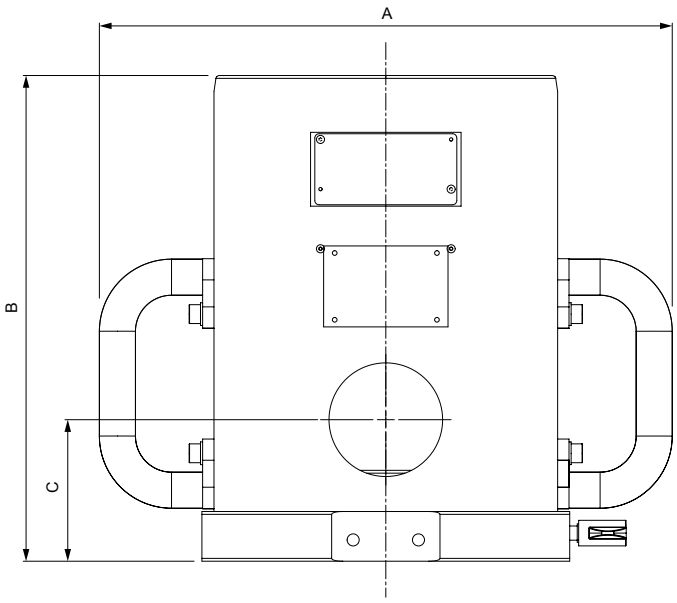

These reaction pots allow for the accurate testing of API rotary intervention tools.

- Conform to ISO13628-8:2002 and API 17D
- Customer specific solutions also available
- Lightweight all aluminium construction
- Incorporated lifting handles
- Eye bolts provided on larger units

4	INTERVENTION TOOL TEST POTS
80019	ISO13628-8:2002 Class 4 Intervention Tool Test Pot
80024	ISO13628-8:2002 Class 5 Intervention Tool Test Pot
80025	ISO13628-8:2002 Class 6 Intervention Tool Test Pot
80020	API 17D Class 7 Intervention Tool Test Pot
81018	Deck Mount Kit for API Verification Pot

MULTIPLIERS FOR SUBSEA

4	MULTIPLIERS FOR INTEGRATION INTO SUB SEA INTERVENTION TOOLS
77331	HT5 5:1 for Sub Sea Intervention Tools
77301	HT5 5:1 for Sub Sea Splined Output

As above but supplied with transducer with an accuracy of ±2%.

4	MULTIPLIERS WITH INTEGRATED TRANSDUCER
77141.IND	HT5 5:1 with Integrated Transducer 350 - 3500 N·m
77142.MAO2	HT5 5:1 with Integrated Transducer 4 - 20 mA 2 wire 600 - 3000 N·m

ENGINEER TO ORDER

Norbar's wide range of standard equipment may not meet your exact requirements as there are applications when something special is required.

As an ISO 9001 accredited company, Norbar will undertake the design and manufacture of special equipment against agreed customer specifications.

These projects range from modified torque wrench end fittings to complete torque and angle control of valve testing kits. Relevant European safety directives are applied where appropriate, leading to well engineered reliable products that are designed to make tasks safer and easier.

For more information on Norbar's Engineer to Order service please e-mail your enquiry to technical@norbar.com or visit the Engineer to Order section of the Norbar website at: www.norbar.com/Services/Engineer-to-Order

Wet Pipe Clamp Tool under test

Valve Testing Kit

Pipe Clamp Actuation Tool

Remote Operated Torque & Angle Kits

Subsea Torque Multipliers (Class 4-6/7 shown)

ULTRASONIC MEASUREMENT

As design engineers push the boundaries to provide greater strength and efficiency in bolted joints, the use of torque, torque and angle, or even tensioning as the method of tension control may not be adequate, leading to costly failures. In those applications, ultrasonic bolt elongation/load measurement is able to provide accuracy equal to strain gauging without the need to strain gauge a bolt. In addition, the use of ultrasonic bolt measurement allows the user to return at any time and re-verify the level of tension in each fastener over its service life. The USM-3 has been both laboratory and field-proven to be the most accurate, reliable and cost effective solution for eliminating bolting failures. These could place workers at risk, lead to the loss of production and/or cause damage to capital equipment.

USM-3 105

USM

Ultrasonic measurement provides a very precise method of determining the elongation of a fastener due to tightening. This elongation is proportional to the load force generated by the fastener.

The basic principle behind this method of tension control is similar to sonar. The ultrasonic measurement of bolt tension is achieved by introducing a sonic pulse at one end of the fastener and accurately measuring the time of flight (TOF) required for the echo to return from the opposite end. Using material constants, the USM-3 converts this TOF into an “acoustic length" of the fastener, providing a baseline from which future measurements will be made. When the fastener is tightened: the TOF increases and the USM-3 will again utilise material constants to eliminate the effects of stress and temperature variations on sound velocity, providing an accurate elongation or load measurement.

The USM-3 uses state of the art hardware and digital signal processing to achieve these measurements with maximum automation, minimizing the need for operator interpretation. Once measurements have been recorded to the USM-3 internal memory, the included SonicBolt software will transfer the data to a computer for backup of files, creation of project reports, and conversion of data to Excel format for further analysis. In addition, the analogue signal output can be used to automatically shut-off powered torque and tensioning tools based on elongation or load, in even the most demanding applications.

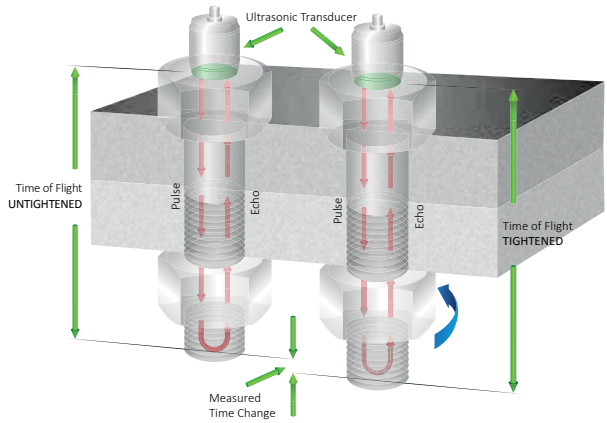

9	USM-3 ULTRASONIC STRESS METER
40334	USM-3 instrument with AC adaptor, nylon case, storage case, transducer cable, RS232 cable, couplant and manual

Magnetic Transducers - This standard style is used with ferrous materials, and consists of a rare earth magnet surrounding the piezo electric transducer.

9	TRANSDUCERS
56016	3/16" 5 MHz Magnetic Transducer
56017	3/16" 7.5 MHz Magnetic Transducer
56018	3/16" 10 MHz Magnetic Transducer
56009	1/4" 5 MHz Magnetic Transducer
56019	1/4" 10 MHz Magnetic Transducer
56011	1/2" 2.25 MHz Magnetic Transducer
56010	1/2" 5 MHz Magnetic Transducer
56020	3/4" 1 MHz Magnetic Transducer
56013	3/4" 2.25 MHz Magnetic Transducer
56012	3/4" 5 MHz Magnetic Transducer
56021	Glue on, 3mm square, 7.5 MHz, pack of 100

Operating temperature limit for transducers is 55°C. Contact Norbar for details of high temperature transducers with a temperature limit of 175°C.

9	TRANSDUCER LEADS
60235	Transducer Lead 10’ (approx 3m)
60236	Transducer Lead 20’ (approx 6m)
56023	Probe for glue on Ultrasonic TD's

9	SPARES & ACCESSORIES
61112	Ultrasonic Couplant Bottle 4oz (approx 0.12 litres)
61116	Serial Lead 6’ DB9 M to DB9 F
61117	Length Bar Set 3" & 6" with certificate
60271	Digital Thermometer (Accuracy ±0.5°C / ±1°F)

CALIBRATION BEAMS & WEIGHTS

Designed to remove potential sources of measurement error, these beams can be used to calibrate Norbar torque transducers, and torque transducers from other manufacturers (where design permits), as well as mechanical test devices. A UKAS accredited calibration certificate for the measurement of the torque radius is provided with each beam. Note: A temperature controlled environment is essential for use of these beams. The selection of weights will be influenced by gravitational constant and air buoyancy values at the proposed laboratory site.

Principles of Operation	107
Calibration Beams & Weights	108

CALIBRATION BEAMS & WEIGHTS - PRINCIPLES OF OPERATION

Norbar's test beams are designed for the static calibration of torque transducers. They are ideally suited to Norbar's transducers, but can be employed on other manufacturer's equipment.

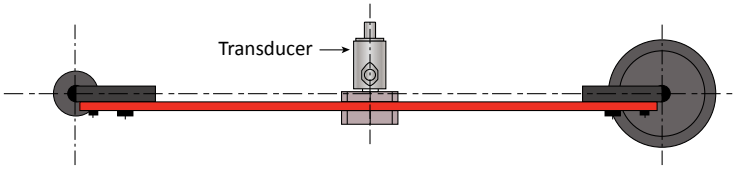

Torque is generated by the application of a known force at a known radius from the centre of rotation of the torque transducer.

The beams are designed with square drives machined to the top limit of ISO 2725. This minimises any play between the beam and the transducer. However, a combination of square drive tolerances, misalignment of fittings and elastic rotation of the transducer shaft inevitably cause the beam to rotate from the horizontal under load.

Norbar's radius ended beams are designed with a ±8 degree usable arc within which the calibration accuracy is unaffected.

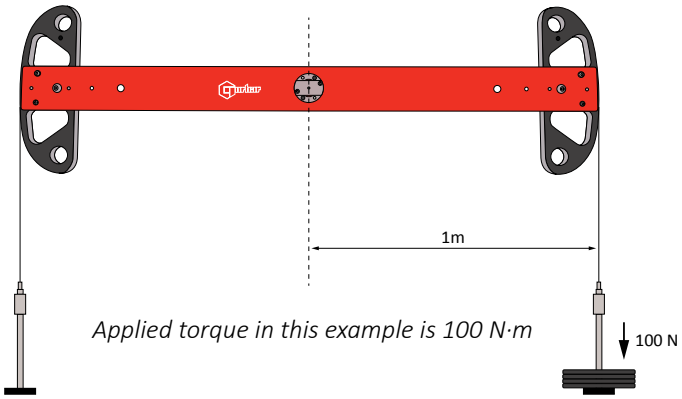

Applied torque in this example is 100 N·m

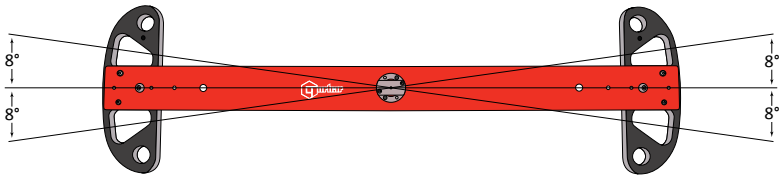

Additionally, the beams are designed to apply load on a vertical plane which cuts through the square drive inside the transducer. This minimises bending moments on the transducer and, for safe operation, ensures that the beam will not fall out of the transducer.

Gravitational Effects

It is very important that the gravitational value for the laboratory is established. The effect of not doing this could be a variation in the force produced by the weight of perhaps 0.5% of reading.

It is therefore strongly recommended that you establish the local value of gravity (g) for your Laboratory and use weights that have been calibrated at that gravitational constant.

Norbar will supply weights calibrated to gravitational constants specified by the customer. However, if the customer does not specify a value for 'g' they will have been calibrated at an estimated gravitational constant for the customers' location.

Buoyancy Effects

The Norbar system uses calibrated weights to generate a downwards force.

This means that Archimedes' principle applies, ie. air pressure under the weights causes an upwards force. This reduces the effective force generated by the weights and therefore the mass must be increased to allow for this.

Under standard conditions (ie. air density 1.2 kg/m3 and 20 degrees centigrade and working in conventional mass terms) the increase required is by a factor of 0.015%.

Weights purchased from Norbar will already have this factor taken into account.

Weights that are calibrated to standard procedures do not have this factor taken into account because the air buoyancy affects both sides of the mass balance and can be ignored. It is important that weights used for torque transducer calibration are adjusted for air buoyancy.

It should also be noted that the double ended beam design employed by Norbar means that each half of the beam is balanced with regard to buoyancy of the beam. This is a significant advantage over single-arm counterbalanced systems.

CALIBRATION BEAMS & WEIGHTS

9	NEWTON METRE SIZES	
21400	100mm	Torque Radius Disc (100mm)
21429	0.5-60 N·m	Radius Ended Beam (0.25m)
21421	5-150 N·m	Radius Ended Beam (0.5m)
21427	50-500 N·m	Radius Ended Beam (0.5m)
21428	10-1500 N·m	Radius Ended Beam (1.0m)
21842	500-5000 N·m	Free Standing Beam

With the exception of 21842 all calibration beams are supplied in a protective wooden box. A UKAS accredited calibration certificate for the measurement of the torque radius is provided with each beam.

9	WEIGHTS FOR THE DISC 21400
21452.NAM	Brass weight set to give 0.5 N·m
21450.NAM	Brass weight set to give 1.0 N·m
21479.NAM	Brass weight set to give 2.5 N·m

9	WEIGHTS FOR THE BEAM 21429
21476.NAM	Cast iron weight set to give 5 N·m
21454.NAM	Cast iron weight set to give 10 N·m
21458.NAM	Cast iron weight set to give 50 N·m
Q2343.NAM	Cast iron weight set to give 60 N·m

9	WEIGHTS FOR THE BEAM 21421
21477.NAM	Cast iron weight set to give 50 N·m
21458.NAM	Cast iron weight set to give 100 N·m

9	WEIGHTS FOR THE BEAM 21427/21428
21459.NAM	Cast iron weight set to give 250 / 500 N·m
Q2344.NAM	Cast iron weight set to give 400 N·m
21460.NAM	Cast iron weight set to give 500 / 1000 N·m
21483.NAM	Cast iron weight set to give 500 / 1000 & 1500 N·m

e.g. set 21459.NAM will give 250 N·m on a 21427 beam and 500 N·m on a 21428.

9	WEIGHTS FOR THE BEAM 21842
21469.NAM	Cast iron weight set to give 5000 N·m

All weight sets come with traceable UKAS accredited calibration certificate. This requires the customer to provide the value for "g" (local gravity) for the intended place of use when ordering.

9	IMPERIAL - POUNDS FEET SIZES	
21400	100mm	Torque Radius Disc (100mm)
21430	10-500 lbf·in	Radius Ended Beam (10")
21424	10-100 lbf·ft	Radius Ended Beam (12")
21425	50-500 lbf·ft	Radius Ended Beam (24")
21426	100-1000 lbf·ft	Radius Ended Beam (48")
21842	500-5000 lbf·ft	Free Standing Beam

With the exception of 21842 all calibration beams are supplied in a protective wooden box. A UKAS accredited calibration certificate for the measurement of the torque radius is provided with each beam.

9	WEIGHTS FOR THE DISC 21400
21455.NAM	Brass weight set to give 50 ozf·in
21453.NAM	Brass weight set to give 100 ozf·in
21451.NAM	Brass weight set to give 160 ozf·in

9	WEIGHTS FOR THE BEAM 21430
21465.NAM	Cast iron weight set to give 100 lbf·in
21466.NAM	Cast iron weight set to give 500 lbf·in

9	WEIGHTS FOR THE BEAM 21424
21467.NAM	Cast iron weight set to give 100 lbf·ft

9	WEIGHTS FOR THE BEAM 21425
21468.NAM	Cast iron weight set to give 500 lbf·ft

9	WEIGHTS FOR THE BEAM 21426
21468.NAM	Cast iron weight set to give 1000 lbf·ft

9	WEIGHTS FOR THE BEAM 21842
21469.NAM	Cast iron weight set to give 5000 lbf·ft

All weight sets come with a traceable UKAS accredited calibration certificate. This requires the customer to provide the value for "g" (local gravity) for the intended place of use when ordering.

9	ANCILLARY PRODUCTS FOR CALIBRATION BEAMS
80000	Pedestal for mounting calibration equipment
80005	Adjustable Angle Attachment
21221	Adaptor STM Calibration ½"

9	CALIBRATION FIXTURES
J2239	Transducer calibration fixture ¼" sq
J2237	Transducer calibration fixture ⅜" sq
J2244	Transducer calibration fixture ½" sq
J2240	Transducer calibration fixture ¾" sq
J2241	Transducer calibration fixture 1" sq
J3305	3° Angled Plate for use with calibration fixtures

Spares Kits 110

SPARES KITS

In order to maintain the quality, performance and peace of mind associated with their products Norbar recommend that only genuine Norbar spares are fitted to their products.

SERVICE REPLACEMENT POLICY

Our aim is to give you the fastest possible service when you send in a wrench for repair. Therefore, our policy is that all Norbar wrenches will, at Norbar's discretion, either be repaired or a 'service replacement' tool will be offered. This policy may be extended to wrenches from other manufacturers sent to Norbar for repair/replacement.

Repair

Where Norbar judges that a repair is viable, a combined repair and "declaration of conformance" (COMBO) service will be offered – see page 114. The setting of the wrench and documentation of the results will be carried out in conformance with ISO6789-1:2017. For customers requiring a calibration certificate conforming to ISO6789-2: 2017 from Norbar's UKAS accredited laboratory, this service can also be offered at an additional cost.

Service Replacement

When Norbar judges that a repair is not commercially viable, a 'service replacement' tool will be offered. A 'service replacement' tool is manufactured from new parts, carries a twelve month warranty and is supplied with the same documentation as a new product of the equivalent type. For Professional, adjustable models from Model 15 to Model 1500 a calibration certificate conforming to ISO6789-2:2017 will be supplied as standard from the production line. All other service replacement models, for example NorTorque and TTi wrenches, will be supplied with a declaration of conformance to ISO6789-1:2017. As with repairs, customers preferring a certificate from Norbar's UKAS accredited laboratory can specify this service at an additional cost.

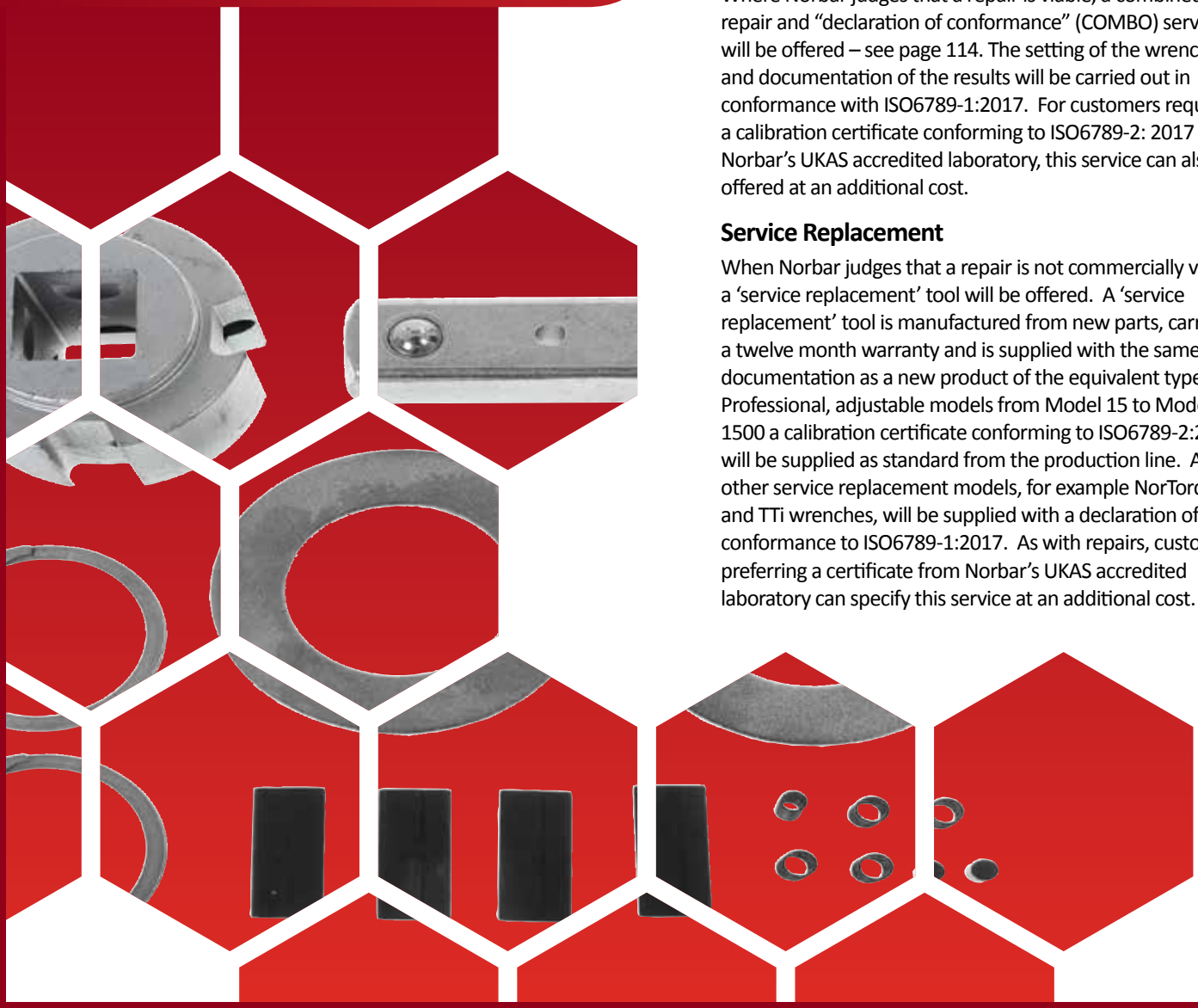

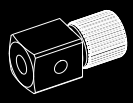

SPARES KITS

8	TORQUE SCREWDRIVER
13593.001NM	TTs Handle Repair Kit for 1.5 N·m Tool
13593.003NM	TTs Handle Repair Kit for 3.0 N·m Tool
13593.006NM	TTs Handle Repair Kit for 6.0 N·m Tool
13593.013LBI	TTs Handle Repair Kit for 13 lbf·in Tool
13593.026LBI	TTs Handle Repair Kit for 26 lbf·in Tool
13593.053LBI	TTs Handle Repair Kit for 53 lbf·in Tool
13593.P	TTs Handle Repair Kit for P Type Tool
13594	TTs Adjusting Screw & Retention Clip Repair Kit
13595	TTs Body Tube & Cam Assembly Repair Kit
13596	TTs End Knob Assembly Repair Kit
13597	TTs ¼" Blade Repair Kit
13609	TTs P Type Locking Knob Repair Kit

8	TT WRENCHES UP TO 50 N·m/35 lbf·ft
13425	¼" Ratchet Repair Kit, Mdl 20 N·m, 180 lbf·in
13426	⅜" Ratchet Repair Kit, Mdl 20 N·m, 180 lbf·in, 50 N·m, 35 lbf·ft
13427	½" Ratchet Repair Kit, Mdl 50 N·m, 35 lbf·ft
13636.020NLF	Handle Repair Kit, 20 N·m/lbf·in Scale
13636.020NM	Handle Repair Kit, 20 N·m Scale
13636.180LBI	Handle Repair Kit, 180 lbf·in Scale
13636.050NLF	Handle Repair Kit, 50 N·m/lbf·ft Scale
13636.050NM	Handle Repair Kit, 50 N·m Scale
13636.035LBF	Handle Repair Kit, 35 lbf·ft Scale
13417	Adjusting Knob Repair Kit
13637	Thrust Washer Repair Kit
11762	Rivet Repair Kit

8	TT WRENCHES 100 N·m/75 lbf·ft TO 300 N·m/ 250 lbf·ft
13410.100NLF	Handle Repair Kit, 100 N·m/lbf·ft Scale
13410.100NM	Handle Repair Kit, 100 N·m Scale
13410.075LBF	Handle Repair Kit, 75 lbf·ft Scale
13410.150NLF	Handle Repair Kit, 150 N·m/lbf·ft Scale
13410.150NM	Handle Repair Kit, 150 N·m Scale
13410.110LBF	Handle Repair Kit, 110 lbf·ft Scale
13410.200NLF	Handle Repair Kit, 200 N·m/lbf·ft Scale
13410.200NM	Handle Repair Kit, 200 N·m Scale
13410.150LBF	Handle Repair Kit, 150 lbf·ft Scale
13410.250NLF	Handle Repair Kit, 250 N·m/lbf·ft Scale
13410.250NM	Handle Repair Kit, 250 N·m Scale
13410.185LBF	Handle Repair Kit, 185 lbf·ft Scale
13410.300NLF	Handle Repair Kit, 300 N·m/lbf·ft Scale
13410.300NM	Handle Repair Kit, 300 N·m Scale
13410.220LBF	Handle Repair Kit, 220 lbf·ft Scale
13410.250LBF	Handle Repair Kit, 250 lbf·ft Scale

8	TT WRENCHES 100 N·m/75 lbf·ft TO 300 N·m/ 250 lbf·ft
13411	Adjusting Knob Repair Kit
13415	Thrust Washer Repair Kit
13414	Rivet Repair Kit

8	TTi WRENCHES
13693	TTi20 ¼" Ratchet Lever Arm Assemblies
13694	TTi20 ⅜" Ratchet Lever Arm Assemblies
13690	TTi50 ⅜" Ratchet Lever Arm Assemblies
13691	TTi50 ½" Ratchet Lever Arm Assemblies
13212	Ratchet Repair Kit, ⅜" sq. dr. 60/100
13214	Ratchet Repair Kit, ½" sq. dr. 200
13215	Ratchet Repair Kit, ½" sq. dr. Mdl 250/300 N·m, 185/220 lbf·ft
13491	Ratchet Replacement Kit , ⅜" sq. dr. 60/100
13492	Ratchet Replacement Kit, ½" sq. dr. 50-200
13493	Ratchet Replacement Kit, ½" sq. dr. Mdl 250/300 N·m, 185/220 lbf·ft)

For Handle Repair Kits please see TT section to the left.

8	TTfth WRENCHES
13695	TTfth20 9x12mm Female End Repair Kit
13692	TTfth50 9x12mm Female End Repair Kit

8	NON-MAGNETIC RATCHET REPAIR KITS
13769	Ratchet repair Kit for 13292 & 13294
13770	Ratchet repair Kit for 13585 & 13295

8	MODEL 5
13123	Spares Kit Model 5 Adjustable
13125	Spares Kit Model 5 'P' Type
13124	Calibration Kit Model 5 'P' Type

8	PROFESSIONAL TORQUE WRENCHES MODELS 60 - 400 (pre March 2015)
11598	'Automotive Ratchet' Repair Kit ⅜" Beta (Mdl 60 & 100)
11618	'Automotive Ratchet' Repair Kit ½" Beta (Mdl 60 & 100)
11622	'Automotive Ratchet' Repair Kit ½" Rev Beta (Mdl 200 & 300)
11623	Push-Through Beta 72 Tooth Repair Kit ½"
13212	'Industrial Ratchet' Repair Kit ⅜" (Mdl 60/100)
13213	'Industrial Ratchet' Repair Kit ½" (Mdl 60/100)
13214	'Industrial Ratchet' Repair Kit ½" (Mdl 200)
13215	'Industrial Ratchet' Repair Kit Mdl 300/330 ½" for 13047, 13049 & 13057
13216	'Industrial Ratchet' Repair Kit Mdl 400 ¾" for 13050 & 13056
13190	Mdl 400 ¾" sq. dr.
13235	Sq. Dr. Repair Kit ⅜" (Mdl 60/100)
13236	Sq. Dr. Repair Kit ½" (Mdl 60/100)
13237	Sq. Dr. Repair Kit ½" Mdl 200/300/330
11824	Spares Kit Mdl 60 Handle (pre 1st Jan 2001)
11825	Spares Kit Mdl 100 Handle (pre 1st Jan 2001)
11826	Spares Kit Mdl 200 Handle (pre 1st Jan 2001)
11827	Spares Kit Mdl 300 Handle (pre 1st Jan 2001)
11828	Spares Kit Mdl 330 Handle (pre 1st Jan 2001)
13157	Spares Kit Prof. Handle (Post 1st Jan 2001)

SPARES KITS

8	PROFESSIONAL TORQUE WRENCHES SPARES KITS
150100.K	Handle Repair Kit
150101.K	Scale Mechanism Repair Kit
150102.K	Locking Knob Repair Kit
150103.K	Thrust Washer and Screw Kit
150104.K	Spring Repair Kit
150105.K	½" sq. dr. Mushroom Kit
150106.K	⅜" sq. dr. Mushroom Kit
150112.K	'Industrial Ratchet' Repair Kit, ⅜" sq. dr. (Mdl 50)
254100.PK	SKT Grub M5 x 8 LG Oval Point - Pack of 50
150113.K	'Industrial Ratchet' Repair Kit, ½" sq. dr. (Mdl 100-200)
150114.K	'Industrial Ratchet' Repair Kit, ½" sq. dr. (Mdl 300-340)
150115.K	'Industrial Ratchet' Repair Kit, ¾" sq. dr. (Mdl 400)
11598	'Automotive Ratchet' Repair Kit ⅜" sq. dr. (Mdl 50 & 100)
11618	'Automotive Ratchet' Repair Kit ½" sq. dr. (Mdl 50 & 100)
150111.K	'Automotive Ratchet 'Repair Kit, ½" sq. dr. (Mdl 200)

8	PROFESSIONAL TORQUE WRENCHES SPARES PACKS
10628.PK	Label TimeStrip - Pack of 50
10640.PK	TimeStrip Adhesive Gasket - Pack of 50
11521.PK	Shaped Washer - Pack of 20
11522.PK	End Stop - Pack of 10
15312.PK	End Cap - Pack of 25
25496.PK	SCR:SKT Grub M5 x 6 LG Oval - Pack of 50
25497.PK	SCR:SKT Grub M5 x 5 LG Dog Point - Pack of 50
254100.PK	SCR:SKT Grub M5 x 8 LG Oval Point - Pack of 50
25746.PK	M3 Dog Point Grub SCR - Pack of 50
25938.PK	Washer M4 STD.Flat - Pack of 100
26033.PK	Pivot Pin - Pack of 20
27029.PK	Steel Ball 3.8mm Dia - Pack of 50
25351.10.PK	SHCS M4 x 10 LG - Pack of 50

8	CLICKTRONIC® TORQUE WRENCHES SPARES KITS
150104.K	Spring Repair Kit
150105.K	½" sq. dr. Mushroom Kit
150106.K	⅜" sq. dr. Mushroom Kit
150107.K	Adjusting Screw and Wiper Kit
150108.K	Locking Knob Kit
150109.K	Lower Handle Kit
150110.K	Complete Handle Kit

8	CLICKTRONIC® TORQUE WRENCHES SPARES PACKS
15524.PK	USB Bung - Pack of 5
39721.PK	Wiper 1-3 N - Pack of 5
25742.PK	M2.5 x 12 LG Torx Pan Screw - Pack of 80
25743.PK	M4 x 8 LG Torx CSK Screw - Pack of 50

8	PROFESSIONAL TORQUE WRENCHES MODELS 550 - 1500
14195	Ratchet Repair Kit Mdl 550/650 ¾"
14196	Ratchet Repair Kit Mdl 800/1000/1500 ¾"
14197	Ratchet Repair Kit Mdl 800/1000/1500 1"
14162	Ratchet Assembly Mdl 550/650
14163	Ratchet Assembly Mdl 1000
12297	Replacement Square Drive Mdl 550/650 ¾"
12299	Replacement Square Drive Mdl 550 1"
14157	Replacement Square Drive Mdl 800-1500 ¾"
14165	Replacement Square Drive Mdl 800-1500 1"
14185	Cover Kit for all Models
14218	Secondary Lever and Support Block Assy Upgrade kit for all Models pre 2004/169391
14217	Secondary Lever and Support Block Assy for all Models post 2004/169391
14220	Secondary Lever Assembly
14187	Screw Adjustable Kit for all Models
14166	Calibration Kit 'P' Type for all Models
13217	Replacement Professional Handle Kit
11807	Handle Spares Kit Professional 'P' Type
11698	Calibration Kit Professional 'P' Type
13242	Rivet Repair Kit

8	SLIMLINE TORQUE WRENCHES
11831	Ratchet Repair Kit SL0 ¼" (Post Jan 2008)
11832	Ratchet Repair Kit SL0 ⅜" (Post Jan 2008)
11806	Spares Kit - SL0 Adj Knob
29683	Mushroom Head Sq. Dr. Assy ½" SL3
11914	⅜"sq.dr for SL0 Fixed Head
11762	Rivet Repair Kit

8	INDUSTRIAL TORQUE WRENCHES
12307	Ratchet Repair Kit Industrial (except 6R)
12373	Ratchet Repair Kit 6R only
12297	¾" Square Drive Assy for 3AR - 5AR
12299	1" Square Drive Assy for 3AR - 5AR
18492	1" Square Drive Assy for 6R
12374	1" Square Drive Repair Kit, 6R only
12355	Ind Thrust Washer Spares Kit
12360	End Caps - Plastic 10 pack (Industrial)
12381	3AR Adjusting Nut
12382	No.4 Adjusting Nut
12383	4R Adjusting Nut
12384	4AR Adjusting Nut
12385	5R Adjusting Nut
12386	5AR Adjusting Nut
12387	6R Adjusting Nut

In order for Norbar to supply the correct adjusting nut, we need to know the correct scale length for the tool being repaired. The scale length is denoted by a number on the nut being replaced and will be of the form e.g. 159/60.

SPARES KITS

8	NORTORQUE® TORQUE WRENCHES HANDLE KITS
130501.060NLF	Handle Repair Kit, 60 N·m/lbf·ft Scale
130501.060NM	Handle Repair Kit, 60 N·m Scale
130501.100NLF	Handle Repair Kit, 100 N·m/lbf·ft Scale
130501.100NM	Handle Repair Kit, 100 N·m Scale
130501.200NLF	Handle Repair Kit, 200 N·m/lbf·ft Scale
130501.200NM	Handle Repair Kit, 200 N·m Scale
130501.300NLF	Handle Repair Kit, 300 N·m/lbf·ft Scale
130501.300NM	Handle Repair Kit, 300 N·m Scale
130501.340NLF	Handle Repair Kit, 340 N·m/lbf·ft Scale
130501.340NM	Handle Repair Kit, 340 N·m Scale

13235 Repair Kit

8	NORTORQUE® TORQUE WRENCHES SQUARE DRIVE REPAIR KITS
13235	Sq. Dr. Repair Kit ⅜" (Mdl60)
13236	Sq. Dr. Repair Kit ½" (Mdl100)
13237	Sq. Dr. Repair Kit ½" (Mdl200/300/340)

13212 Repair Kit

8	NORTORQUE® TORQUE WRENCHES RATCHET REPAIR KITS
13212	Ratchet Repair Kit ⅜" (Mdl60)
13213	Ratchet Repair Kit ½" (Mdl100)
13214	Ratchet Repair Kit ½" (Mdl200)
13215	Ratchet Repair Kit ½" (Mdl300/340)

8	NORTORQUE® TORQUE WRENCHES OTHER REPAIR KITS
130500.K	Locking Knob Kit
150103.K	Thrust Washer and Screw Kit

13212 Repair Kit

8	MULTIPLIER SPARES KIT
16831	Spares Kit No. 2 Output Carrier
16836	Spares Kit No. 5 Output Carrier
16832	Spares Kit No. 7 Output Carrier
16835	Spares Kit No. 9 Output Carrier
19348	HT3-1000 N·m Retention Pin
19349	HT3-1000 N·m Cranked Reaction
19347	HT3-1000 N·m Straight Reaction
77018.1	Sq. Drive HT3 ¾" (old style)
17185	Spares Kit HT3 ¾" Sq Dr (Pre May 1993 style with shoulder screw)
17676	Sq. Drive HT3 ¾"(to fit 17218, 17220 & all other models with square drive retained by rollpin)

77018.1

17676

17185

17223	Spares Kit HT3 Carriers
17224	Spares Kit HT3 ½" Input Gear
17225	Spares Kit HT3 ¾" Input Gear
18365	Spares Kit 72mm Air Motor Handle
18374	Spares 72mm Remote Block
18544	Replacement ¾" sq. dr. ET/PTS/PTM-52 Series
18545	Replacement 1" sq. dr. ET/PTS/PTM-52 Series
18779	Replacement ¾" sq. dr. ET/PTS/PTM-72 Series
18492	Replacement 1" sq. dr. ET/PTS/PTM-72 Series
18221	Replacement ¾" sq. dr. PT 72 Series
18220	Replacement 1" sq. dr. PT 72 Series
19260	Spares Kit for Fwd/Rev Gearbox Knob post Feb 2011 Tools
19077	Upgrade Kit for Fwd/Rev Gearbox for PTM

8	ET/PTS™/PTM-92 & ET/PTS™/PTM-119 SQUARE DRIVES
18934	1" for ET/PTS/PTM-92
18935	1½" for ET/PTS/PTM-92
18959	1½" for ET/PTS/PTM-119

8	VANE SETS FOR PNEUTORQUE® MULTIPLIERS
18631	For PTM Series (Pack of 5)
18278	For PT 72mm Series (Pack of 6)
16218	For PT Standard Series (Pack of 6)

8	SPARES FOR LUBRO CONTROL UNIT
28911	3m Hose*
28912	6m Hose*
28913	Pressure Gauge
28914	Filter Element for Filter/Regulator
28915	Bowl Assembly for Filter/Regulator
28916	Bowl Assembly for Lubricator
28917	Locking Collar
28918	½" BSP Taper Thread Adaptor

*Other lengths of Hose are available, please contact Norbar for details.

CALIBRATION SERVICES

Declaration of Conformance	114
UKAS Accredited Calibration Certification	114
Other Certification	118
General Notes	118

A calibration 'priority booking' service is available, please contact the Customer Relations Department a minimum of one month prior to the required recalibration due date.

- **Tel: +44 (0)1295 753635**
- **Fax: +44 (0)1295 753636**
- **Email: repairs@norbar.com**

CALIBRATION SERVICES

Devices sent in for UKAS accredited calibration certification will be calibrated and the 'As Found' readings recorded. The calibration will be performed to the appropriate standard as specified in our schedule of accreditation.

a) Should the device be in specification 'As Found', a certificate will be raised and the device returned.

b) Should the device be out of specification, but capable of adjustment, it will be adjusted, 'As Left' readings taken, and one certificate raised with 'As Found' and 'As Left' readings on it.

c) Should the device require repair that is not covered by a combined calibration and service, we will do so where possible, after consultation with the customer.

Norbar are accredited by UKAS for torque measurements between 0.005 N·m and 108,500 N·m or the imperial equivalents. Our Schedule of Accreditation gives further details (please refer to www.norbar.com).

UKAS accredited calibration certificates are issued under the authority of the United Kingdom Accreditation Service.

Norbar can calibrate non-Norbar Torque products, please contact us with the details of your equipment.

DECLARATION OF CONFORMANCE

TORQUE WRENCH DECLARATION OF CONFORMANCE (DOC)

ONE DIRECTION	
DOC1.CW	Up to 400 N·m / 300 lbf·ft
DOC2.CW	Up to 1000 N·m / 750 lbf·ft
DOC3.CW	Up to 3000 N·m / 2200 lbf·ft

ONE DIRECTION & REPAIR COMBO	
RCDOC1.CW	NorTorque® and Professional wrenches up to 400 N·m
RCDOC2.CW	Industrial wrenches 2R - 5R
RCDOC3.CW	Industrial wrenches 5AR & 6R
RCDOC4.CW	Large Professional 550 & 650 N·m
RCDOC5.CW	Large Professional 800 - 1500 N·m

TWO DIRECTIONS	
DOC1.CW+CCW	Up to 400 N·m / 300 lbf·ft
DOC2.CW+CCW	Up to 1000 N·m / 750 lbf·ft
DOC3.CW+CCW	Up to 3000 N·m / 2200 lbf·ft

TWO DIRECTIONS & REPAIR COMBO	
RCDOC1.CW+CCW	NorTorque® and Professional wrenches up to 400 N·m
RCDOC2.CW+CCW	Industrial wrenches 2R - 5R
RCDOC3.CW+CCW	Industrial wrenches 5AR & 6R
RCDOC4.CW+CCW	Large Professional 550 & 650 N·m
RCDOC5.CW+CCW	Large Professional 800 - 1500 N·m

UKAS ACCREDITED CALIBRATION CERTIFICATION

TORQUE WRENCH, UKAS ACCREDITED CALIBRATION CERTIFICATION

On receipt an 'As Found' calibration certificate will be carried out where possible. If the results do not fall within specification the wrench will be adjusted and if the adjustment does not bring the wrench back within specification then it will either be repaired or a service replacement will be offered – see page 109 for further details.
Calibration certificates are in accordance with the current standard for hand torque tools BS ISO 6789-2:2017. The certificate shows the nominal torque applied and the measured torque readings.
For guidance on Norbar's procedure for wrenches sent in for repair, see page 109. If the same tool is required to be returned, i.e. if you do not want the tool to be service replaced, then this should be made clear on the purchase order which accompanies the tool.

ONE DIRECTION	
TWCC1.CW	Up to 400 N·m / 300 lbf·ft
TWCC2.CW	Up to 1000 N·m / 750 lbf·ft
TWCC3.CW	Up to 3000 N·m / 2200 lbf·ft

TWO DIRECTIONS	
TWCC1.CW+CCW	Up to 400 N·m / 300 lbf·ft
TWCC2.CW+CCW	Up to 1000 N·m / 750 lbf·ft
TWCC3.CW+CCW	Up to 3000 N·m / 2200 lbf·ft

NORTRONIC® UKAS ACCREDITED CALIBRATION CERTIFICATION

ONE DIRECTION & ANGLE	
NTCC1.CW	NorTronic® all sizes

TWO DIRECTIONS & ANGLE	
NTCC1.CW+CCW	NorTronic® all sizes

MANUAL TORQUE MULTIPLYING GEARBOXES, UKAS ACCREDITED CALIBRATION CERTIFICATION

The part numbers shown below are for Certification 'As Found',

ONE DIRECTION	
HTCC1.CW	Up to 6000 N·m / 5000 lbf·ft

TWO DIRECTIONS	
HTCC1.CW+CCW	Up to 6000 N·m / 5000 lbf·ft

SWEENEY MULTIPLIER ONE DIRECTION	
SWEENEY	Sweeney Multiplier Calibration

UKAS ACCREDITED CALIBRATION CERTIFICATION

ELECTRONIC DEVICES

In accordance with the current standards for calibration of torque measurement devices, it is desirable to calibrate transducers with the display that is normally used. In this case the 'system' is calibrated. If it is not possible to supply the display unit, an equivalent calibrated display unit from the laboratory will be used. The calibration will then be valid for the transducer with the original display as long as the original display has been calibrated within the last 12 months.

Calibration certificates are in accordance with the current standard for torque measuring devices BS 7882:2017, and show the nominal torque applied, and the measured torque readings. Measured readings may be given in mV/V on request. Details of the standard are available on request.

It is not our intention to offer a full repair service for torque devices from other manufacturers. Where a device is in need of repair, the customer is advised to have this performed by an approved service agent or the manufacturer before submitting the device for UKAS accredited calibration. Some electronic transducer systems from other manufacturers may incur an additional calibration cost; the electronics department repair technicians will clarify this point if required. Occasionally it will be necessary to manufacture special adaptors to enable the calibration to be performed. This will of course affect the price and delivery, and will be discussed with the customer as the need arises.

CALIBRATION TO BS7882:2017 CLASS 0.1

Norbar's UKAS accredited laboratory performs standard calibrations on torque measuring devices to BS7882:2017 class 0.2 increasing torques only. However the laboratory is able to calibrate devices to class 0.1 at the customer's request. Class 0.1 requires calibration in four different mounting positions each rotated 90° about the measurement axis. Classification to class 0.1 is dependent on the devices performance. Calibrations including a decreasing series of torques can also be provided if required. A price for these services is available on request.

This section contains combined calibration and service fixed prices for Norbar products. Other manufacturers' equipment will be handled by individual quotation. Provided that the product is in serviceable condition*, we guarantee to carry out all calibration, function checks and repair work in order to bring the equipment back to its original functionality.

*Product would be regarded as unserviceable if either it or the components required for the repair are obsolete or unavailable. Serviceability also implies that the product is capable of repair without complete replacement.

Service replacements are available for some products.

ELECTRONIC TORQUE TRANSDUCERS, UKAS ACCREDITED CALIBRATION CERTIFICATION (WITH SQUARE DRIVE, FLANGE MOUNTED & PRE 2004 ROTARY)

The part numbers shown below are for Combined Calibration and Service, 'As Found' and 'As Left'

ONE DIRECTION	
TDCCS1.CW	Up to 1500 N·m / 1000 lbf·ft
TDCCS5.CW@	From 1501 to 7000 N·m / 1001 - 5000 lbf·ft
TDCCS3.CW+	Square/Splined Drive From 7001 to 100000 N·m / 5001 to 100000 lbf·ft
TDCCS4.CW+	Flange Drive From 7001 to 100000 N·m / 5001 to 100000 lbf·ft
ADDCALPOINTS.CCS	Additional calibration steps below 10% of rated capacity to 2% for transducers up to 7000 N·m (5000 lbf·ft)

TWO DIRECTIONS	
TDCCS1.CW+CCW	Up to 1500 N·m / 1000 lbf·ft
TDCCS5.CW+CCW@	From 1501 to 7000 N·m / 1001 - 5000 lbf·ft
TDCCS3.CW+CCW+	Square/Splined Drive From 7001 to 100000 N·m / 5001 to 100000 lbf·ft
TDCCS4.CW+CCW+	Flange Drive From 7001 to 100000 N·m / 5001 to 100000 lbf·ft

@ UKAS accredited calibration up to 6000 N·m. A non-accredited value at 7000 N·m is extrapolated and provided for reference only.

+ UKAS accredited calibration up to 80000 lbf·ft. A non-accredited value at 100000 lbf·ft is extrapolated and provided for reference only.

For part numbers TDCCS3.CW and TDCCS4.CW, static transducers with 2½" square drives and annular transducers to fit HT/PT9 & HT/PT11, a secondary calibration to extend the range below 10% of the rated capacity may be ordered using part number TDCCS5.CW

For part numbers TDCCS3.CW+CCW and TDCCS4.CW+CCW, static transducers with 2½" square drives and annular transducers to fit HT/PT9 & HT/PT11, a secondary calibration to extend the range below 10% of the rated capacity may be ordered using part number TDCCS5.CW+CCW

UKAS ACCREDITED CALIBRATION CERTIFICATION

ROTARY TRANSDUCERS (2004 ONWARDS), UKAS ACCREDITED CALIBRATION CERTIFICATION (PART CODE 50708.XXX-50724.XXX)

The part numbers shown below are for Combined Calibration and Service, 'As Found' and 'As Left'

ONE DIRECTION	
TDCCS2.CW	Up to 1500 N·m / 1000 lbf·ft

TWO DIRECTIONS	
TDCCS2.CW+CCW	Up to 1500 N·m / 1000 lbf·ft

TRUCHECK™

The part numbers shown below are for Combined Calibration and Service, 'As Found' and 'As Left'

ONE DIRECTION	
TCCCS1.CW	TruCheck™ All Sizes (UKAS Accredited Calibration Certification)
TCCCS2.CW	TruCheck™ All Sizes *

TWO DIRECTIONS	
TCCCS1.CW+CCW	TruCheck™ All Sizes (UKAS Accredited Calibration Certification)

*Issued with traceable certification.

PRO-TEST, UKAS ACCREDITED CALIBRATION CERTIFICATION

The part numbers shown below are for Combined Calibration and Service, 'As Found' and 'As Left'

ONE DIRECTION	
PROCCS.CW	Pro-Test All sizes

TWO DIRECTIONS	
PROCCS.CW+CCW	Pro-Test All Sizes

PRO-LOG, TTT, T-BOX, T-BOX XL™ & TTL-HE, UKAS ACCREDITED CALIBRATION CERTIFICATION

The part numbers shown below are for Combined Calibration and Service, 'As Found' and 'As Left'

ONE DIRECTION	
INSTCCS3.CW	Pro-Log or TTT

TWO DIRECTIONS	
INSTCCS3.CW+CCW	Pro-Log or TTT
INSTCCS4.CW+CCW	TTL-HE, T-Box or T-Box XL™
43217R	TTL-HE Service Replacement

TST, UKAS ACCREDITED CALIBRATION CERTIFICATION

The part numbers shown below are for Combined Calibration and Service, 'As Found' and 'As Left' This includes both an instrument and system calibration

ONE DIRECTION	
TSTCCS.CW	TST

TWO DIRECTIONS	
TSTCCS.CW+CCW	TST

Section with combined calibration & service ends here.

CALIBRATION BEAMS & WEIGHTS, UKAS ACCREDITED CALIBRATION CERTIFICATION

The part numbers shown below are for Length Certification, 'As Found' and 'As Left'

CBLC1	Disc or Beam up to 150 N·m / 100 lbf·ft
CBLC2	Disc or Beam up to 1500 N·m / 1000 lbf·ft
CBLC3	Disc or Beam up to 6800 N·m / 5000 lbf·ft
WEIGHT.CC1	Calibration of Weights up to 25 kgf / 245 N / 55 lbf

UKAS ACCREDITED CALIBRATION CERTIFICATION

MECHANICAL TORQUE TESTING DEVICES, UKAS ACCREDITED CALIBRATION CERTIFICATION

The part numbers shown below are for Combined Calibration and Service, 'As Found' and 'As Left'

ONE DIRECTION	
MCCS1.CW	Up to 5000 N·m / 5000 lbf·ft

TWO DIRECTIONS	
MCCS1.CW+CCW	Up to 5000 N·m / 5000 lbf·ft

TWA, UKAS ACCREDITED CALIBRATION CERTIFICATION

The part numbers shown below are for Combined Calibration and Service, 'As Found' and 'As Left'

ONE DIRECTION	
TWACCS.CW	TWA All Sizes

TWO DIRECTIONS	
TWACCS.CW+CCW	TWA All Sizes

ETS, UKAS ACCREDITED CALIBRATION CERTIFICATION

The part numbers shown below are for Combined Calibration and Service, 'As Found' and 'As Left'

INSTCCS1.CW	ETS

DTS, UKAS ACCREDITED CALIBRATION CERTIFICATION

ONE DIRECTION	
DTSCCS1.CW@	DTS up to 7000 N·m or 5000 lbf·ft
DTSCCS2.CW+	DTS from 7001 to 100000 N·m / 5001 to 100000 lbf·ft Square and Spline drive
DTSCCS3.CW+	DTS from 7001 to 100000 N·m / 5001 to 100000 lbf·ft Flange drive

TWO DIRECTIONS	
DTSCCS1.CW+CCW@	DTS up to 7000 N·m or 5000 lbf·ft
DTSCCS2.CW+CCW+	DTS from 7001 to 100000 N·m / 5001 to 100000 lbf·ft Square and Spline drive
DTSCCS3.CW+CCW+	DTS from 7001 to 100000 N·m / 5001 to 100000 lbf·ft Flange drive

@ UKAS accredited calibration up to 6000 N·m. A non-accredited value at 7000 N·m is extrapolated and provided for reference only.

\+ UKAS accredited calibration up to 80000 lbf·ft. A non-accredited value at 100000 lbf·ft is extrapolated and provided for reference only.

ETTA, UKAS ACCREDITED CALIBRATION CERTIFICATION

The part numbers shown below are for Combined Calibration and Service, 'As Found' and 'As Left'

ETTACCS.CW	ETTA

GENERAL DEVICES, UKAS ACCREDITED CALIBRATION CERTIFICATION

EMCC	Mechanical Enclosure Meter Calibration (CW + CCW)

OTHER CERTIFICATION

EVOTORQUE® AND PNEUTORQUE® CERTIFICATES

These devices are outside the scheduled accreditation issued by UKAS.

HTCERT	Compact Series Calibration
PTCERT	PneuTorque® Calibration
PTICEC	PTM IC/EC Certificate of air pressure vs torque
ETCERT	EvoTorque® Certificate of torque and angle

USM CERTIFICATES

These devices are outside the scheduled accreditation issued by UKAS.

USMCC	Ultrasonic Stress Meter certificate of calibration

GENERAL DEVICES

These devices are outside the scheduled accreditation issued by UKAS.

Weight Set Certificates accredited by UKAS or other certified bodies	
ETSDPFT	ETS Data Printer. Function Test
ETSBPUFT	ETS Battery Power Unit. Function Test
FWSUFT	ETS or ETTA 5 Way Switch Unit. Function Test
TWSUFT	ETS or ETTA 2 Way Switch Unit. Function Test

TRANSDUCER CONVERSIONS

SQ8888	ETS Transducer conversion to Smart Transducer (does not include calibration)
SQ2005	ETTA Transducer conversion to Smart Transducer (does not include calibration)

GLOBAL SERVICE

Norbar is the only torque equipment manufacturer capable of offering tool and instrument calibration services to the original factory standard on four continents.

NORBAR TORQUE TOOLS LTD
Wildmere Road, Banbury,
Oxfordshire, OX16 3JU
UNITED KINGDOM
Tel + 44 (0)1295 753600
Email sales@norbar.com

0256

NORBAR TORQUE TOOLS
45-47 Raglan Avenue,
Edwardstown, SA 5039
AUSTRALIA
Tel + 61 (0)8 8292 9777
Email enquiry@norbar.com.au

NORBAR TORQUE TOOLS INC
36400 Biltmore Place,
Willoughby, Ohio 44094
USA
Tel + 1 866 667 2272
Email inquiry@norbar.us

NVLAP Lab Code 200596-0

NORBAR TORQUE TOOLS PTE LTD
194 Pandan Loop,
#07-20 Pantech Business Hub,
SINGAPORE 128383
Tel + 65 6841 1371
Email enquires@norbar.sg

NORBAR TORQUE TOOLS (SHANGHAI) LTD
7/F, Building 91, No. 1122,
Qinzhou North Road
Xuhui District, Shanghai
CHINA 200233
Tel + 86 21 6145 0368
Email sales@norbar.com.cn

NORBAR TORQUE TOOLS INDIA PVT. LTD
Plot No A – 168 Khairne Industrial Area
Thane Belapur Road
Mahape Navi Mumbai – 400 709
INDIA
Tel + 91 22 2778 8480
Email enquiry@norbar.in

Accredited laboratories in Australia, USA, Singapore, China and India operate the same equipment and procedures as the UKAS accredited laboratory within our headquarters in the UK.

1. INTERPRETATION AND APPLICATION OF TERMS

1.1 In these Conditions the following words have the following meanings:

"Contract"	means the contract between Norbar and the Customer for the sale and purchase of the Goods and/or Services, incorporating these Conditions, the Order and the Order Acknowledgement;
"Customer"	means the person(s), firm or company who purchases Goods and/or Services from Norbar;
"Customer Equipment"	means equipment belonging to the Customer which is the subject of Services to be carried out under a Contract;
"Delivery Point"	means the address within the UK mainland which is notified to Norbar as the place for delivery of the Goods and/or Customer Equipment;
"Engineer to Order Goods"	means any non-standard Goods specifically designed, modified and/or made for the Customer or to the Customer's specification;
"Goods"	means the goods set out in the Order to be supplied by Norbar to the Customer (including any part or parts of them);
"Norbar"	means Norbar Torque Tools Limited (380480), whose registered office address is at Wildmere Road, Banbury, Oxon, OX16 3JU;
"Order"	means the order for the Goods and/or Services placed on Norbar by the Customer;
"Order Acknowledgement"	means the acknowledgement of Order issued by Norbar to the Customer;
"Services"	means the services set out in the Order to be performed by Norbar for the Customer.

1.2 Subject to any variation under Condition 1.4 the Contract will be on these Conditions, the Order and the Order Acknowledgment to the exclusion of all other terms and conditions. They supersede any previously issued terms and conditions of supply. If there is any discrepancy between these Conditions, the Order and the Order Acknowledgement, the latter will prevail to the extent necessary to resolve the inconsistency.

1.3 No terms or conditions endorsed upon, delivered with or contained in the Customer's Order, confirmation of order, specification or other document will form part of the Contract.

1.4 These Conditions apply to all of Norbar's sales and any variation to these Conditions and any representations about the Goods and/or Services will have no effect unless expressly agreed in writing and signed by an authorised representative of Norbar. The Customer acknowledges that it has not relied on and will have no remedy in respect of any statement, promise or representation made or given by or on behalf of Norbar which is not set out in the Contract. Nothing in this Condition will exclude or limit Norbar's liability for fraudulent misrepresentation.

1.5 Each Order or acceptance of a quotation for Goods or Services by the Customer from Norbar will be deemed to be an offer by the Customer to purchase Goods and/or Services subject to these Conditions and no Order will be deemed to be accepted by Norbar until a written Order Acknowledgement is issued by Norbar or Norbar delivers the Goods and/or Services to the Customer, whichever occurs first.

1.6 Any quotation is given on the basis that no Contract will come into existence until Norbar despatches an Order Acknowledgement or delivers the Goods and/or Services to the Customer. Any quotation is valid for a period of 30 days only from its date, provided that Norbar has not previously withdrawn or amended it.

2 DESCRIPTION

2.1 The description of the Goods will be as set out in Norbar's catalogue or other published specification current at the time that the relevant order is accepted by Norbar or, in the case of Services and Engineer to Order Goods, as specified in the relevant quotation or Order Acknowledgement. If there is any inconsistency between the published specification, the quotation and the Order Acknowledgement, the Order Acknowledgement will take precedence over the quotation which will take precedence over the published specification to the extent necessary to resolve the inconsistency.

2.2 Norbar reserves the right to make any changes to the specification of the Goods (including Engineer to Order Goods) and/or Services which are required to conform with any applicable statutory or regulatory requirements or which do not materially affect their quality or performance. The Customer will not be permitted to reject Goods and/or Services and Norbar will have no liability to the Customer in respect of any failure of the Goods and/or Services to comply with any specification in these circumstances.

2.3 The Customer acknowledges that all intellectual property rights in the Goods (including Engineer to Order Goods) and in any novel combinations or applications of the Goods (whether as a kit, system or otherwise) or which arise in the course of conducting the Services belong solely to Norbar and, to the extent that any such rights do not automatically vest in Norbar by operation of law, hereby assigns to Norbar all such rights. The Customer will take any action and execute any document reasonably required by Norbar to give full effect to this Condition.

3 DELIVERY

3.1 In the case of sales of Goods within the UK mainland, delivery will take place:

a) if the Goods are to be collected, on delivery to the Customer or to the Customer's named carrier at Norbar's premises at Wildmere Road, Banbury, Oxon OX16 3JU; and

b) in all other cases, on delivery to the Delivery Point.

In the case of sales outside the UK mainland (including non-mainland UK) sales will be delivered FCA Norbar's premises at Wildmere Road, Banbury, Oxon OX16 3JU (INCOTERMS 2010 edition), except where otherwise agreed in writing.

3.2 All Services will be performed at Norbar's premises at Wildmere Road, Banbury, Oxon OX16 3JU unless otherwise agreed in writing and the Services will be deemed to be performed on completion of the performance of the Services as specified in the Order Acknowledgement.

3.3 Any dates specified by Norbar for delivery of the Goods or performance of the Services are intended to be an estimate and time for delivery will not be made of the essence by notice. If no dates are so specified, delivery will be within a reasonable time. The Goods and/or Services may be delivered by instalments.

3.4 If for any reason the Customer will not accept delivery of any of the Goods when they are ready for delivery, or Norbar is unable to deliver the Goods on time because the Customer has not provided appropriate instructions, documents, licences or authorisations then, without prejudice to any other right or remedy available to Norbar:

a) risk in the Goods will pass to the Customer;

b) the Goods will be deemed to have been delivered; and

c) Norbar may store the Goods until delivery whereupon the Customer will be liable for all related costs and expenses (including, without limitation, storage and insurance).

3.5 Norbar may, at its discretion, accept returns of Goods ordered in error or no longer required, subject to the payment of a handling charge of 15% of the order value (excluding VAT), except that:

a) Production 'P' type wrenches will not be accepted for return;

b) Goods supplied with a UKAS accredited calibration certificate will be subject to a recalibration charge in addition to the handling charge;

c) Engineer to Order Goods may be charged for up to 100% of full price.

Goods returned for credit will only be accepted if they are returned in the original packaging, in a new, unused condition, carriage paid within 30 days after the despatch date.

4 NON DELIVERY

4.1 The quantity of any consignment of Goods as recorded by Norbar upon despatch from Norbar's place of business will be conclusive evidence of the quantity received by the Customer on delivery unless the Customer can provide conclusive evidence proving the contrary.

4.2 Norbar will not be liable for any non delivery of Goods (even if caused by Norbar's negligence) unless written notice is given to Norbar within 14 days of the date when the Goods would, in the ordinary course of events, have been received.

4.3 Any liability of Norbar for non delivery of the Goods will be limited to replacing the Goods within a reasonable time or issuing a credit note at the pro rata Contract rate against any invoice raised for such Goods.

5 RISK/TITLE

5.1 The Goods are at the risk of the Customer from the time of delivery.

5.2 Ownership of the Goods will not pass to the Customer until Norbar has received in full (in cash or cleared funds) all sums due to it in respect of the Goods and all other sums which are or which become due to Norbar from the Customer on any account.

5.3 Until ownership of the Goods has passed to the Customer, the Customer will hold all Goods on a fiduciary basis as Norbar's bailee and Norbar will be entitled at any time:

a) to require (at no cost to Norbar) that the Goods are stored separately and clearly marked in such a way that they will readily be seen to be the property of Norbar; and/or

b) to require the Customer to deliver up the Goods or any part of them to Norbar and if the Customer refuses to do so, to immediately repossess them; and/or

c) to enter any premises or vehicle (by its employees or agents and in the case of premises, with or without vehicles) where Goods still owned by Norbar are stored or reasonably thought to be stored in order to inspect and/or repossess them.

5.4 Norbar will be entitled to recover payment for the Goods ordered notwithstanding that ownership of the Goods has not passed from Norbar.

5.5 The Customer may resell the Goods before ownership has passed to it providing that any such sale is made in the ordinary course of its business at full market value and the Customer is not aware that an event specified in Condition 5.6(a) has occurred or is likely to occur.

5.6 Until ownership of the Goods has passed to the Customer, the Customer's right to possession of the Goods will terminate immediately if:

a) the Customer is made bankrupt or petitions for its own bankruptcy, or has a receiver, administrative receiver or administrator appointed over all or any of its assets or undertaking or, other than for the purposes of a solvent amalgamation or reconstruction, enters into liquidation, enters into any composition or arrangement with or for the benefit of its creditors or ceases to carry on business; or

b) the Customer fails to observe or perform any of its obligations under the Contract or any other contract between Norbar and the Customer; or

c) the Customer encumbers or in any way charges any of the Goods.

5.7 Ownership of all Customer Equipment will remain the property of the Customer throughout the provision of the Services. Subject to Condition 6.2, Norbar will take reasonable care to safeguard the Customer Equipment and no less care than it takes to safeguard its own similar property.

5.8 On termination of the Contract for any reason, Norbar's rights under this Condition 5 will remain in effect.

6 PRICE AND PAYMENT

6.1 Unless otherwise agreed by Norbar in writing the price for the Goods and/or Services will be the price set out in Norbar's price list current as at the date of delivery of the Goods or performance of the Services or will be as set out in any quotation provided by Norbar.

6.2 The price given in the current Norbar price list for calibration and repair services or in any quotation for such Services is subject to the returned Customer Equipment being of serviceable condition. If the Customer Equipment is not of serviceable condition or is out of specification and cannot be adjusted or is uneconomic to repair, either a new quotation will be provided or a service replacement tool will be offered to the Customer. If the Customer does not accept the revised quotation or service replacement within 30 days, Norbar will re-quote, revising the costs as necessary. If after a further 30 days instructions have still not been received, Norbar may (at its option) either return the Customer Equipment and invoice for costs incurred or dispose of the Customer Equipment.

6.3 The price for the Goods and/or Services will be exclusive of any value added tax which the Customer will pay in addition when it is due to pay for the Goods and/or Services. The price for Goods and Services includes the cost

of delivery (or return of Customer Equipment in the case of Services) if the order (i) is for delivery on Monday to Friday (inclusive) within the UK mainland to the Customer's usual Delivery Point using Norbar's usual delivery method and (ii) has a value of over £100.00 (excluding VAT). If delivery is to Northern Ireland, the price for Goods and Services includes the cost of delivery (or return of Customer Equipment in the case of Services) if the order (i) is for delivery on Monday to Friday (inclusive) to the Customer's usual Delivery Point using Norbar's usual delivery method and (ii) has a value of over £300.00 (excluding VAT). In all other cases, the cost of delivery of Goods or return of Customer Equipment will be charged in addition and will be due for payment at the same time as payment for the Goods is due.

6.4 If the Customer holds an account with Norbar, payment of the price for the Goods and/or Services is due within the agreed payment terms for that account. If any amount payable is not made within 30 days after the due date in accordance with the terms of the account, Norbar may withdraw credit facilities. If the Customer does not have an account with Norbar, or if credit facilities have been withdrawn from the Customer, payment is due either at the time the Order is placed or in accordance with any payment schedule set out in the quotation and may be tendered by cheque, credit card or bank transfer. In all cases, payment must be in pounds sterling (except where otherwise agreed in writing).

6.5 Time for payment will be of the essence.

6.6 No payment will be deemed to have been received until Norbar has received cleared funds.

6.7 All payments payable to Norbar under the Contract will become due immediately upon termination of this Contract notwithstanding any other Condition of the Contract or any other arrangement or agreement between the parties.

6.8 The Customer will make all payments due under the Contract without any deduction whether by way of set-off, counterclaim, discount, abatement or otherwise unless the Customer has a valid court order requiring an amount equal to such deduction to be paid by Norbar to the Customer.

6.9 If the Customer fails to pay Norbar any sum due pursuant to the Contract the Customer will be liable to pay interest to Norbar on such sum from the due date for payment at the annual rate of 4% above the base lending rate from time to time of HSBC Bank plc, accruing on a daily basis until payment is made, whether before or after any judgment.

7. WARRANTY AND LIABILITY

7.1 Norbar warrants that, subject to the other provisions of these Conditions upon delivery, and for a period of 12 months after the date of delivery, the Goods will:

a) be of satisfactory quality within the meaning of the Sale of Goods Act 1979; and

b) comply in all material respects with the specification for them as set out in Norbar's catalogue or other published specification current at the time that the order for the Goods was accepted by Norbar.

7.2 Norbar warrants that, subject to the other provisions of these Conditions all Services will:

a) be supplied with reasonable skill and care within the meaning of the Supply of Goods and Services Act 1982; and

b) conform in all material respects with the specification for them as set out in Norbar's catalogue or other published specification current at the time the order for the Services was accepted by Norbar (unless specifically varied in the quotation or Order Acknowledgement).

7.3 Norbar will not be liable for a breach of any of the warranties in Condition 7.1 unless:

a) the Customer gives written notice of the defect to Norbar within 14 days of the time when the Customer discovers or ought to have discovered the defect; and

b) the Customer returns the defective Goods properly packed, carriage paid to Norbar's premises at the address given in Condition 1.1 or otherwise specified by Norbar.

7.4 Norbar will not be liable for a breach of the warranties in Condition 7.1 if:

a) the Customer makes any further use of the Goods after giving notice of any defect; or

b) the Goods have been misused, mishandled, overloaded, amended, modified or repaired in any way by the Customer or its customers, or used for any purpose other than that for which they were designed; or

c) the defect is due to fair wear and tear or arises because the Goods have been subject to excessive use or used in an environment for which they were not designed; or

d) the Customer or its customer has failed to follow Norbar's oral or written instructions as to the storage, installation, commissioning, use, repair, calibration or maintenance of the Goods or the recommendations set out in any national or international standard applicable to the Goods or (if there are no applicable instructions or standards) good trade practice.

7.5 Norbar will not be liable for a breach of the warranties in Condition 7.2 unless:

a) the Customer gives written notice to Norbar identifying which Services are defective in sufficient detail within 14 days of the time when the Customer discovers or ought to have discovered the defect; and

b) if the claim relates to Customer Equipment, Norbar is given a reasonable opportunity to examine the Customer Equipment and to assess the claim of defective Services,

7.6 Subject to Conditions 7.3 and 7.4, if any of the Goods do not conform with any of the warranties in Condition 7.1, Norbar will at its option repair or replace such Goods (or the defective part of them) or refund the price of such Goods at the pro rata Contract rate. The provisions of these Conditions will apply to any Goods that are remedied or replaced.

7.7 Subject to Condition 7.5 if any of the Services do not conform with any of warranties in Condition 7.2, Norbar will at its option remedy, re-perform or refund the Services that do not comply at the pro rata Contract rate. The provisions of these Conditions will apply to any Services that are remedied or re-performed for a period of 90 days with effect from the date of performance of the remedied or re-performed Services. If any repair of Customer Equipment fails within 90 days after the date on which it was returned to the Customer by Norbar, Norbar will at its option remedy, re-perform or refund the Services that do not comply at the pro rata Contract rate.

7.8 If Norbar complies with Condition 7.6 or 7.7 (as applicable), it will have no further liability for a breach of any of the warranties in Condition 7.1 or 7.2 in respect of such Goods and/or Services.

7.9 Except as provided in Conditions 7.1 and 7.2, Norbar makes no representation or warranty, whether express or implied, as to the quality or fitness for purpose of the Goods or Services and all warranties, Conditions and other terms which may be implied by statute or common law are, to the fullest extent permitted by law, excluded from the Contract.

7.10 Nothing in this Contract excludes or limits the liability of Norbar for:

a) death or personal injury caused by Norbar's negligence; or

b) defective products under the Consumer Protection Act 1987; or

c) for fraud or fraudulent misrepresentation; or

d) any matter for which it would be unlawful for Norbar to exclude or restrict liability.

THE CUSTOMER'S ATTENTION IS DRAWN TO THE PROVISIONS OF CONDITION 7.11

7.11 Subject to 7.10:

a) Norbar's total liability in contract, tort (including negligence or breach of statutory duty), misrepresentation, restitution or otherwise arising in connection with the performance or contemplated performance of this Contract will be limited to the price of the Goods and/or Services; and

b) Norbar will not in any event be liable to the Customer for any loss of profit, loss of business or depletion of goodwill or loss of data, in each case whether direct, indirect or consequential, or any claims for consequential compensation whatsoever (howsoever caused) which arise out of or in connection with this Contract.

7.9 The Customer acknowledges that the price of the Goods and/or Services has been calculated on the basis that Norbar excludes and limits its liability in accordance with Condition 7.11.

7.10 Where the Goods and/or Services are sold under a consumer transaction the statutory rights of the Customer are not affected by these Conditions.

8. FORCE MAJEURE

Norbar reserves the right to defer the date of delivery or to cancel the Contract or reduce the volume of the Goods or Services ordered by the Customer (without liability to the Customer) if it is prevented from or delayed in the carrying on of its business due to circumstances beyond the reasonable control of Norbar including, without limitation, acts of God, governmental actions, war or national emergency, riot, civil commotion, fire, explosion, flood, epidemic, lock-outs, strikes or other labour disputes (whether or not relating to either party's workforce), or restraints or delays affecting carriers or inability or delay in obtaining supplies of adequate or suitable materials or components.

9. NOTICES

Any notice to be given under this Contract will be in writing and will be sent by first class mail within the UK, or by air mail, or by fax; in the case of Norbar to the address set out in Condition 1.1 and in the case of the Customer to the Delivery Point or such other address or fax number as the Customer may from time to time notify to Norbar for this purpose in accordance with this Condition. Notices sent as above will be deemed to have been received three working days after the date of posting (in the case of mail within the UK), or seven working days after the date of posting (in the case of air mail), or on the next working day after transmission (in the case of faxed messages) but only if a transmission report is generated by the sender's fax machine recording error free transmission of all pages to the correct fax number.

10. ANTI-BRIBERY

10.1 Both Norbar and the Customer will comply with the United Kingdom Bribery Act 2010 and associated guidance and all other applicable United Kingdom legislation, statutory instruments and regulations in relation to bribery or corruption and similar or equivalent legislation in any other relevant jurisdiction.

10.2 Without limitation to clause 10.1, neither party shall make or receive any bribe (as defined in the Bribery Act 2010) or other improper payment or allow any such to be made or received on its behalf either in the United Kingdom or elsewhere and shall implement and maintain adequate procedures to ensure that such bribes or payments are not made or received directly or indirectly on its behalf.

11. GENERAL

11.1 The parties to the Contract do not intend that any term of the Contract will be enforceable by virtue of the Contracts (Rights of Third Parties) Act 1999 by any person that is not a party to it, except that any Affiliate of Norbar may directly enforce any term of the Contract where "Affiliate" means any entity that directly or indirectly Controls, is Controlled by or is under common control with Norbar and "Control" means ownership of more than 50% of the issued share capital of a company.

11.2 Each right or remedy of Norbar under the Contract is without prejudice to any other right or remedy of Norbar whether under the Contract or not.

11.3 If any provision of the Contract is found by any court, tribunal or administrative body of competent jurisdiction to be wholly or partly illegal, invalid, void, voidable or unenforceable it will to the extent of such illegality, invalidity, voidness, voidability or unenforceability be deemed severable and the remaining provisions of the Contract and the remainder of such provision will continue in full force and effect.

11.4 The Customer will not be entitled to assign the Contract or any part of it without the prior written consent of Norbar. Norbar may assign the Contract or any part of it or sub-contract any or all of its obligations under the Contract to any person, firm or company.

11.5 Failure or delay by Norbar in enforcing or partially enforcing any provision of the Contract will not be construed as a waiver of any of its rights under the Contract.

11.6 Any waiver by Norbar of any breach of, or any default under, any provision of the Contract by the Customer will not be deemed a waiver of any subsequent breach or default and will in no way affect the other terms of the Contract.

11.7 The formation, existence, construction, performance, validity and all aspects of the Contract will be governed by English law and the parties submit to the non-exclusive jurisdiction of the English courts.

NORBAR PROMOTIONAL MATERIAL

CATALOGUES & LEAFLETS	
07571	NorTorque® Leaflet
07536	ClickTronic® Leaflet
07563	New Professional Leaflet
07570	EvoTorque®2 Leaflet
07560	T-Box XL™ Leaflet
07554	USM Leaflet
07557	Oil & Gas ETO Leaflet
07579	HandTorque® HT3-1000 Leaflet
07580	Industrial 2R & 2AR Leaflet
07581	PneuTorque® PTS™ Leaflet
07585	Right Angle Gearbox Leaflet

PROMOTIONAL ITEMS	
07509	Norbar Oval Logo Sticker 156mm
07532	Norbar Torque Wrench Display Boards Contact Norbar for slat wall adaptors
07539	Norbar Branded Pens
07540	Norbar Branded Post-It Notes
07551	Norbar Branded A6 Notepads
07553	Norbar Branded Lanyards
07555	Norbar Branded Baseball Caps
07582	PTS Credit Card USB 16GB
07572	Set of 12 Posters
07573	Norbar Branded Construction Pen
07574	Norbar Branded 2 Ring White Ring Binder
07575	Nobar Branded 4 Ring Black Organisers
07576	Norbar Branded Screen Saver Cloth / Mouse Mat
07577	Norbar Branded Laptop Bag
07578	Norbar Branded A4 Grid Notepad

2018 NORBAR SHUTDOWN PERIODS

THE FACTORY WILL BE CLOSED ON THE FOLLOWING DATES (INCLUSIVE)
Monday 1st January
Friday 30th March to Monday 2nd April - Easter Bank Holiday
Monday 7th May - May Day Bank Holiday
Monday 28th May - Spring Bank Holiday
Monday 27th August - Late Summer Bank Holiday
Monday 24th December to Tuesday 1st January 2019 - Christmas Shutdown

Distributed by

CUSTOMER RELATIONS

OFFICE OPENING HOURS

Monday - Thursday	07:30 - 17:30
Friday	07:30 - 16:15

CONTACT DETAILS

New Sales
Direct Tel +44 (0)1295 753600
Email sales@norbar.com

After Sales Service
+44 (0)1295 753635
repairs@norbar.com

Norbar Torque Tools Ltd
Wildmere Road, Banbury
Oxfordshire, OX16 3JU
UNITED KINGDOM
www.norbar.com

Part No. 07437.18

© Norbar Torque Tools Ltd 2018